NAVIGATION
SOLUTIONS
POWERED BY
EUROPE

EUROPEAN GNSS (GALILEO) OPEN SERVICE

# SIGNAL-IN-SPACE INTERFACE CONTROL DOCUMENT

Issue 2.0, January 2021

# TERMS OF USE AND DISCLAIMERS

## 1. Authorised Use and Scope of Use

The European GNSS (Galileo) Open Service Signal-In-Space Interface Control Document Issue 2.0 (hereinafter referred to as OS SIS ICD) and the information contained herein is made available to the public by the European Union (hereinafter referred to as Publishing Authority) for information, standardisation, research and development and commercial purposes for the benefit and the promotion of the European Global Navigation Satellite Systems programmes (European GNSS Programmes) and according to terms and conditions specified thereafter.

## 2. General Disclaimer of Liability

With respect to the OS SIS ICD and any information contained in the OS SIS ICD, neither the EU as the Publishing Authority nor the generator of such information make any warranty, express or implied, including the warranty of fitness for a particular purpose, or assumes any legal liability or responsibility for the accuracy, completeness, or usefulness of any information hereby disclosed or for any product developed based on this information, or represents that the use of this information would not cause damages or would not infringe any intellectual property rights. No liability is hereby assumed for any direct, indirect, incidental, special or consequential damages, including but not limited to, damages for interruption of business, loss of profits, goodwill or other intangible losses, resulting from the use of the OS SIS ICD or of the information contained herein. Liability is excluded as well for consequences of the use and / or abuse of the OS SIS ICD or the information contained herein.

## 3. Intellectual Property Rights

The information contained in the OS SIS ICD, including its Annexes, is subject to intellectual property rights (hereinafter referred to as IPR).

### Copyright

The OS SIS ICD is protected by copyright. Any alteration or translation in any language of the OS SIS ICD as a whole or parts of it is prohibited unless the Publishing Authority provides a specific written prior permission. The OS SIS ICD may only be partly or wholly reproduced and/or transmitted to a third party in accordance with the herein described permitted use and under the following conditions:

- the present “Terms of Use and Disclaimers”, as well as the terms of Annex G, are accepted, reproduced and transmitted entirely and unmodified together with the reproduced and/or transmitted information;
- the copyright notice “© European Union 2021” is not removed from any page.

### Industrial Property Rights

The use of the information contained in the OS SIS ICD, including the spreading codes which are subject to IPR, is authorised under the terms and conditions stated in Annex G. The use of the Galileo related trademarks that EU owns is authorised under the terms and conditions stated in Annex H.

## 4. Miscellaneous

No failure or delay in exercising any right in relation to the OS SIS ICD or the information contained therein shall operate as a waiver thereof, nor shall any single or partial exercise preclude any other or further exercise of such rights.

The disclaimers contained in this document apply to the extent permitted by applicable law.

## 5. Updates

The OS SIS ICD in its current version could be subject to modification, update, and variations.

The publication of updates will be subject to the same terms as stated herein unless otherwise evidenced.

Although the Publishing Authority will deploy its efforts to give notice to the public for further updates of OS SIS ICD, it does not assume any obligation to advise on further developments and updates of the OS SIS ICD, nor to take into account any inputs, comments proposed by interested persons or entities, involved in the updating process.

## Document Change Record

| Reason for change | Issue | Revision | Date |
|---|---|---|---|
| First issue | Draft | 0 | May 2006 |
| CBOC Modulation added, 'lossless atmosphere' assumption removed from Tx power definition (issue under study), SAR data, update of the bit allocations of some F/NAV and I/NAV pages, editorial corrections etc. | Draft | 1 | February 2008 |
| Update of the 'Terms of Use and Disclaimers' section and namely the licensing policy for R&D and standardisation purposes as well as commercial purposes.<br>Assignment of the primary and secondary codes to satellites in section in section 3.6.<br>More details on the I/NAV alert page content in section 4.3.2.3.<br>Clarification of the power sharing between the different Galileo signal components in section 2.7.1.<br>Addition of Galileo E1 sub-carriers plots in section 2.3.3<br>Clarification that Galileo E5a and E5b signals can be processed as QPSK signals in section 2.3.1.2.<br>Update of the acronym list with QPSK in annex A.<br>In section 4.2.4, for Page Type 6, parameter 'i' has been replaced by $\omega$, the argument of perigee.<br>In section 5.1.2, Time of Week an entire week from 0 to 604799 seconds, not up to 604800. | Issue 1 | 0 | February 2010 |
| Licence Agreement has been made easier to be adopted by licensees.<br>Terms of use and disclaimers have been amended accordingly. | Issue 1 | 1 | September 2010 |
| "Reference Documents" section 1.3 added.<br>Update of the constellation description and Earth radius in section 1.3.<br>Correction of $DC_{X-Y}$ and $rect_T(t)$ definitions in Table 4.<br>E1-B, E1-C and E5 Primary Codes now delivered only in the electronic version of this ICD: sections 3.4.1 and 3.4.2, Annex C.<br>Secondary Codes $CS100_{37}$ to $CS100_{39}$ added in Table 20.<br>I/NAV usage updated in section 4.1.1.<br>Correction of "Dummy Data (2/2)" bits allocation in Table 53.<br>Correction of "start bit" value (equal 0 instead of 1) in part (5/8) of long RLM in Table 58.<br>Added "start bit" value (equal 1) in Table 59.<br>Correction of "GTRF coordinates" formula in Table 61 (last row): "y" is the sum of the two terms.<br>Updated description of GST start epoch in section 5.1.2.<br>Section 5.1.6 (Ionospheric Correction) reviewed.<br>Clarification of "Day Number" value range in Table 68.<br>Confirmation of "Data validity Status Bit" values in Table 73.<br>E1 B/C Signal Health Status parameter definition updated in Sections 5.1.9.3 and 5.1.10.<br>Updates of section 5.2 relevant to the SAR Return Link Message to include RLM data content.<br>New Annex D "FEC Coding and Interleaving Numerical Examples" added.<br>Correction of expression "(ΔA)1/2"(Difference with respect to the square root of the nominal semi-major axis) of Table 46 into the correct expression "Δ(A1/2)"<br>The licence agreement has been revised and simplified.<br>Miscellaneous minor typographical and wording corrections. | Issue 1 | 2 | November 2015 |

| Reason for change | Issue | Revision | Date |
|---|---|---|---|
| Section 2.7.1 has been reworded to clarify that the Galileo satellites provide a specified power level on ground starting from 5 degrees satellite elevation angle.<br><br>Annex G - Authorisation Concerning the OS SIS ICD IPRs has been updated and 6 items (rows) have been added to the table in section G.12, which contains the list of OS SIS ICD related Intellectual Property Rights, to reflect the new licences granted to the EU on 6 patents. | Issue 1 | 3 | December 2016 |
| With this issue three new features are introduced to the I/NAV message transmitted within the Galileo E1 OS signal *(Secondary Synchronisation Pattern, Reduced Clock and Ephemeris and Reed-Solomon Outer Forward Error Correction)*. The following changes have been made to introduce all the necessary elements:<br><br>• I/NAV Nominal Sub-Frame Layout within section 4.3.3 updated<br>• New I/NAV word types (16, 17, 18, 19, 20) added within section 4.3.5<br>• New section 5.1.9.5 describing Secondary Synchronisation Pattern introduced<br>• New section 5.1.11 describing Reduced Clock and Ephemeris Data introduced<br>• New section 5.1.13 describing Protection of I/NAV Clock and Ephemeris Data by means of Reed-Solomon Outer Forward Error Correction<br>• New Annexes E *(Reference Algorithm for Exploitation of FEC2 Reed-Solomon Words)* and F *(Reference Algorithm for Exploitation of FEC2 Reed-Solomon Words)* added<br><br>In addition, sections 2.3.2 (E6 signal) and 2.7 (Received Power Levels on Ground) have been updated and a new Annex H (Authorisation Concerning use of the Galileo Trade Marks) has been added. | Issue 2 | 0 | January 2021 |

# Table of Contents


1. Introduction ..... 1
1.1. Document Scope ..... 1
1.2. Document Overview ..... 1
1.3. Reference Documents ..... 1
1.4. Galileo System Overview ..... 1

2. Galileo Signal Characteristics ..... 3
2.1. Frequency Plan ..... 3
2.1.1. Frequency Bands ..... 3
2.1.2. Carrier Frequencies ..... 3
2.1.3. Receiver Reference Bandwidths ..... 3
2.2. Signal Polarisation ..... 4
2.3. Modulation ..... 4
2.3.1. ES Signal ..... 4
2.3.1.1. Modulation Scheme ..... 5
2.3.1.2. Modulation Type ..... 6
2.3.1.3. Equivalent Modulation Type ..... 7
2.3.2. E6 Signal ..... 8
2.3.3. E1 Signal ..... 9
2.4. Logic Levels ..... 10
2.5. Transmitted Signal Phase Noise ..... 11
2.6. Transmitted Signals Code/Data Coherency ..... 11
2.7. Received Power Levels on Ground ..... 11
2.8. Payload and Component Reception Losses ..... 12

3. Galileo Spreading Codes Characteristics ..... 13
3.1. Code Lengths ..... 13
3.2. Tiered Codes Generation ..... 13
3.3. Primary Codes Generation ..... 14
3.4. Primary Codes Definition ..... 14
3.4.1. E5 Primary Codes ..... 14
3.4.1.1. Base Register 2 Start Value for E5a-I ..... 15
3.4.1.2. Base Register 2 Start Value for E5a-Q ..... 16
3.4.1.3. Base Register 2 Start Value for E5b-I ..... 17
3.4.1.4. Base Register 2 Start Value for E5b-Q ..... 18
3.4.2. E1-B and E1-C Primary Codes ..... 19
3.5. Secondary Codes ..... 19
3.5.1. Definition of Secondary Codes ..... 19
3.5.2. Secondary Codes Assignment ..... 22
3.6. Code Assignments to Satellites ..... 23
3.6.1. Primary code assignment to satellites ..... 23
3.6.2. Secondary code assignment to satellites ..... 23

4. Galileo Message Structure ..... 25
4.1. General Message Format Specification ..... 25
4.1.1. General Navigation Message Content ..... 25
4.1.2. General Navigation Message Structure ..... 25
4.1.3. Bit and Byte Ordering Criteria ..... 25

*4.1.4. FEC Coding and Interleaving Parameters* ... *25*
4.1.4.1. FEC Encoding ... 25
4.1.4.2. Interleaving ... 26
4.1.4.3. FEC Coding and Interleaving Numerical Examples ... 26
*4.1.5. Frame and Page Timing* ... *26*
*4.1.6. Reserved and Spare Bits* ... *26*
**4.2. F/NAV Message Description ... 27**
*4.2.1. General Description of the F/NAV Message* ... *27*
*4.2.2. F/NAV Page Layout* ... *27*
4.2.2.1. Synchronisation Pattern ... 27
4.2.2.2. Tail Bits ... 27
4.2.2.3. F/NAV Word ... 27
*4.2.3. F/NAV Frame Layout* ... *28*
*4.2.4. F/NAV Page Contents* ... *30*
*4.2.5. F/NAV Dummy Page Definition* ... *31*
**4.3. I/NAV Message Description ... 31**
*4.3.1. General Description of the I/NAV Message* ... *31*
*4.3.2. I/NAV Page Layout* ... *32*
4.3.2.1. Synchronisation Pattern ... 32
4.3.2.2. Tail Bits ... 33
4.3.2.3. I/NAV Page Part ... 33
*4.3.3. I/NAV Nominal Sub-Frame Layout* ... *34*
*4.3.4. I/NAV Nominal Frame Layout* ... *36*
*4.3.5. I/NAV Word Types* ... *37*
*4.3.6. I/NAV Dummy Message Layout* ... *40*
*4.3.7. SAR Field Structure* ... *41*

**5. Message Data Contents ... 43**
**5.1. Navigation Data ... 43**
*5.1.1. Ephemeris* ... *43*
*5.1.2. Galileo System Time (GST)* ... *45*
*5.1.3. Clock Correction Parameters* ... *46*
*5.1.4. Satellite Time Correction Algorithm* ... *46*
*5.1.5. Broadcast Group Delay* ... *47*
*5.1.6. Ionospheric Correction* ... *48*
*5.1.7. GST-UTC Conversion Algorithm and Parameters* ... *49*
*5.1.8. GPS to Galileo System Time Conversion and Parameters* ... *50*
*5.1.9. Service Parameters* ... *51*
5.1.9.1. Satellite ID ... 51
5.1.9.2. Issue Of Data ... 51
5.1.9.3. Navigation Data Validity and Signal Health Status ... 52
5.1.9.4. Checksum ... 53
5.1.9.5. Secondary Synchronisation Pattern ... 53
*5.1.10. Almanac* ... *54*
*5.1.11. Reduced Clock and Ephemeris Data* ... *55*
*5.1.12. Signal – In – Space Accuracy (SISA)* ... *58*
*5.1.13. Protection of I/NAV Clock and Ephemeris Data by means of Reed-Solomon Outer Forward Error Correction* ... *59*
5.1.13.1. RS information vector ... 59
5.1.13.2. RS parity vector ... 61
**5.2. SAR RLM Data ... 62**

**Annex A - List of Acronyms** ..... 63

**Annex B - Definitions and Nomenclature** ..... 65

**Annex C – Galileo E1 and E5 Primary Codes** ..... 67

**Annex D – FEC Coding and Interleaving Numerical Examples** ..... 69

**Annex E – Reference Algorithm for Exploitation of FEC2** ..... 71

**Annex F – Specification of the Outer FEC2 Reed-Solomon Encoding of CED in the Galileo E1 I/NAV Message** ..... 72

**Annex G – Authorisation Concerning the OS SIS ICD IPRs** ..... 79

**Annex H – Authorisation Concerning use of the Galileo Trade Marks** ..... 85

# List of Figures


Figure 1. Space Vehicle/Navigation User Interface ..... 2
Figure 2. Galileo Frequency Plan ..... 3
Figure 3. Modulation Scheme for the E5 Signal ..... 5
Figure 4. One Period of the Two Sub-carrier Functions Involved in AltBOC Modulation ..... 7
Figure 5. 8-PSK Phase-State Diagram of E5 AltBOC Signal ..... 7
Figure 6. Modulation Scheme for the E6 Signal ..... 8
Figure 7. Modulation Scheme for the E1 CBOC Signal ..... 9
Figure 8. One period of the CBOC sub-carrier for a) the E1-B signal component, and b) the E1-C signal component ..... 10
Figure 9. Tiered Codes Generation ..... 13
Figure 10. LFSR Based Code Generator for Truncated and Combined M-sequences ..... 14
Figure 11. Code Register Feedback Taps Representation (example for E5a-I) ..... 15
Figure 12. Start Value Representation for Base Register 2 (first code of E5a-I) ..... 15
Figure 13. Convolutional Coding Scheme ..... 26
Figure 14. F/NAV Message Structure ..... 27
Figure 15. I/NAV Message Structure in the Nominal Mode ..... 32
Figure 16. Protection of I/NAV CED by Outer Forward Error Correction (FEC2 RS) ..... 59
Figure 17. FEC2 RS information vector $C_{RS}$ ..... 60
Figure 18. Derivation of the octet vector $C_{RS,0}$ ..... 60
Figure 19. Derivation of the octet vectors $C_{RS,1}$, $C_{RS,2}$ and $C_{RS,3}$ ..... 60
Figure 20. FEC2 RS parity vector $\gamma_{RS}$ ..... 61
Figure 21. Derivation of the octet vectors $\gamma_{RS,0}$, $\gamma_{RS,1}$, $\gamma_{RS,2}$ and $\gamma_{RS,3}$ ..... 61
Figure 22. Reference algorithm for exploitation of the FEC2 RS CED words ..... 71
Figure 23. Shortening of the systematic RS code vector (symbol allocation for polynomial encoding) ..... 75

# List of Tables


Table 1. Main orbit characteristics of the nominal Galileo constellation ..... 1
Table 2. Carrier Frequency per Signal ..... 3
Table 3. Galileo Signals Receiver Reference Bandwidths ..... 4
Table 4. Signal Description Parameters ..... 5
Table 5. E5 Chip Rates and Symbol Rates ..... 6
Table 6. AltBOC Sub-carrier Coefficients ..... 6
Table 7. Look-up Table for AltBOC Phase States ..... 8
Table 8. E6 Chip Rates and Symbol Rates ..... 8
Table 9. E1 CBOC Chip Rates and Sub-carrier Rates ..... 9
Table 10. E1-B/C Symbol Rates ..... 10
Table 11. Logic to Signal Level Assignment ..... 10
Table 12. Received Minimum Power Levels on Ground ..... 11
Table 13. Additional Losses due to Receiver Filtering ..... 12
Table 14. Code Lengths ..... 13
Table 15. E5 Primary Codes Specifications ..... 15
Table 16. Base Register 2 Start Values and First Code Chip for E5a-I ..... 16
Table 17. Base Register 2 start Values and First Code Chip for E5a-Q ..... 17
Table 18. Base Register 2 Start Values and First Code Chip for E5b-I ..... 18
Table 19. Base Register 2 Start Values and First Code Chip for E5b-Q ..... 19
Table 20. Secondary Code Sequences (Part 1) ..... 21
Table 21. Secondary Code Sequences (Part 2) ..... 22
Table 22. Secondary Code Assignment ..... 23
Table 23. Message Allocation and General Data Content ..... 25
Table 24. Data Coding Parameters ..... 26
Table 25. Interleaving Parameters ..... 26
Table 26. F/NAV Page Layout ..... 27
Table 27. F/NAV Frame Layout ..... 30
Table 28. Bits Allocation for F/NAV Page Type 1 ..... 30
Table 29. Bits Allocation for F/NAV Page Type 2 ..... 30
Table 30. Bits Allocation for F/NAV Page Type 3 ..... 30
Table 31. Bits Allocation for F/NAV Page Type 4 ..... 31
Table 32. Bits Allocation for F/NAV Page Type 5 ..... 31
Table 33. Bits Allocation for F/NAV Page Type 6 ..... 31
Table 34. Bits Allocation for F/NAV Dummy Page ..... 31
Table 35. I/NAV Page Part Layout ..... 32
Table 36. I/NAV Nominal Page with Bits Allocation ..... 33
Table 37. I/NAV Alert Page with Bits Allocation ..... 34
Table 38. I/Nav Nominal Sub-Frame Structure ..... 35
Table 39. I/NAV Sub-Frame Sequencing ..... 37
Table 40. Bits Allocation for I/NAV Word Type 1 ..... 37
Table 41. Bits Allocation for I/NAV Word Type 2 ..... 37
Table 42. Bits Allocation for I/NAV Word Type 3 ..... 38
Table 43. Bits Allocation for I/NAV Word Type 4 ..... 38
Table 44. Bits Allocation for I/NAV Word Type 5 ..... 38
Table 45. Bits Allocation for I/NAV Word Type 6 ..... 38
Table 46. Bits Allocation for I/NAV Word Type 7 ..... 38
Table 47. Bits Allocation for I/NAV Word Type 8 ..... 39
Table 48. Bits Allocation for I/NAV Word Type 9 ..... 39
Table 49. Bits Allocation for I/NAV Word Type 10 ..... 39
Table 50. Bits Allocation for I/NAV Word Type 16 ..... 39
Table 51. Bits Allocation for I/NAV Word Types 17, 18, 19, and 20 ..... 39

Table 52. Bits Allocation for Spare Word 40
Table 53. I/NAV Dummy Page with Bits Allocation 40
Table 54. Dummy Word with Bits Allocation 41
Table 55. SAR Field Bit Structure 41
Table 56. RLM Identifier Description 41
Table 57. SAR Short RLM 41
Table 58. SAR Long RLM 42
Table 59. Spare SAR Data 42
Table 60. Ephemeris Parameters 44
Table 61. User Algorithm for Ephemeris Determination 45
Table 62. GST Parameters 45
Table 63. Galileo Clock Correction Parameters 46
Table 64. Galileo Clock Correction Data 46
Table 65. BGD Parameters 47
Table 66. BGD Values Mapping on Messages and Services 48
Table 67. Ionospheric Correction Parameters 48
Table 68. Parameters for the GST-UTC Conversion 49
Table 69. Parameters for the GPS Time to GST Offset Computation 51
Table 70. Satellite ID 51
Table 71. IOD Values Mapping on Data Type 51
Table 72. Data Validity Satellite Status (transmitted on E5a) 52
Table 73. Data Validity Satellite Status (transmitted on E5b and E1-B) 52
Table 74. Data validity Status Bit Values 52
Table 75. Signal Health Status for E5a (transmitted on E5a) 52
Table 76. Signal Health Status for E5b and E1-B/C (transmitted on E5b and E1-B) 52
Table 77. Signal Health Status Bit Values 52
Table 78. Bit and symbol sequences of the three SSP confi gurations 53
Table 79. Almanac Parameters 55
Table 80. Reduced Clock and Ephemeris Data parameters 56
Table 81. Reduced CED parameters Reference Time Computation 56
Table 82. Introduction of Reduced CED Orbital Parameters into Computation of Satellite Position 57
Table 83. Introduction of Reduced CED Clock minus Radial Error Correction Coefficients into Computation of ΔtSV 57
Table 84. SISA Index Values 58
Table 85. SISA Parameters 58
Table 86. SAR RLM Message Code Values 62
Table 87. SAR Short-RLM Data Values 62
Table 88. Example for the Translation of Logical (binary) Spreading Code into Hexadecimal Representation 67
Table 89. Primary Code-Length and Hexadecimal Representation Characteristics for the Galileo Signal Components 67
Table 90. Polynomial, octet and power representation of GF(256) using p(x)=x8+x4+x3+x2+1 73
Table 91. Integer octet representation of the coefficients of the generator polynomial 74

# 1. Introduction

## 1.1. Document Scope

The present European GNSS (Galileo) Open Service Signal-In-Space Interface Control Document (OS SIS ICD) Issue 2.0 contains the publicly available information on the Galileo Signal-In-Space. It is intended for use by the Galileo user community and it specifies the interface between the Galileo Space Segment and the Galileo User Segment.

## 1.2. Document Overview

The present document is organised as follows:

- Chapter 1 is this introduction which provides the scope of the document and an overview of the Galileo system
- Chapter 2 provides the Signal-In-Space radio frequency characteristics
- Chapter 3 provides the characteristics of the spreading codes
- Chapter 4 provides the message structures
- Chapter 5 provides the characteristics of the navigation message data contents

## 1.3. Reference Documents


[RD1] European GNSS, Galileo Open Service, Ionospheric Correction Algorithm for Galileo Single Frequency Users, Issue 1.1.
http://www.gsc-europa.eu/electronic-library/programme-reference-documents

[RD2] COSPAS – SARSAT, Specification for Cospas – Sarsat 406MHz Distress Beacons, C/S T.001


## 1.4. Galileo System Overview

Galileo is the European global navigation satellite system providing a highly accurate and global positioning service under civilian control. It is interoperable with GPS and GLONASS, the two other current global satellite navigation systems.

The fully deployed Galileo system consists of 24 operational satellites and up to 6 active spares, positioned in three circular Medium Earth Orbit planes. The nominal values of the main parameters for the Galileo constellation are defined in Table 1.

| Parameter | Explanation | Value |
|---|---|---|
| $e_{nominal}$ | Nominal orbit eccentricity | 0 |
| $i_{nominal}$ | Nominal orbit inclination with reference to the equatorial plane | 56° |
| $A_{nominal}$ | Nominal orbit semi-major axis | 29 600 000 m |

Table 1. Main orbit characteristics of the nominal Galileo constellation

Galileo provides enhanced distress localisation and call features for the provision of a Search and Rescue (SAR) service interoperable with the COSPAS – SARSAT system.

Figure 1 specifies the radio-frequency air interface between space and user segments. Three independent CDMA signals, named E5, E6 and E1, are permanently transmitted by all Galileo satellites. The E5 signal is further sub-divided into two signals denoted E5a and E5b.

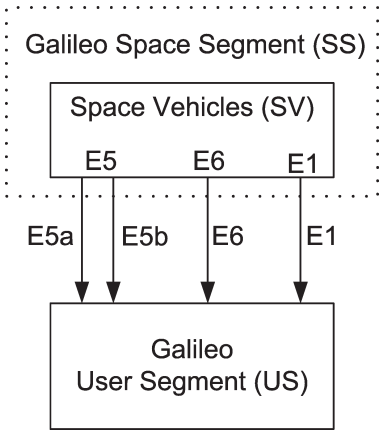


Figure 1. Space Vehicle/Navigation User Interface

# 2. Galileo Signal Characteristics

## 2.1. Frequency Plan

### 2.1.1. Frequency Bands

The Galileo navigation Signals are transmitted in the four frequency bands indicated in Figure 2. These four frequency bands are the E5a, E5b, E6 and E1 bands. They provide a wide bandwidth for the transmission of the Galileo Signals.

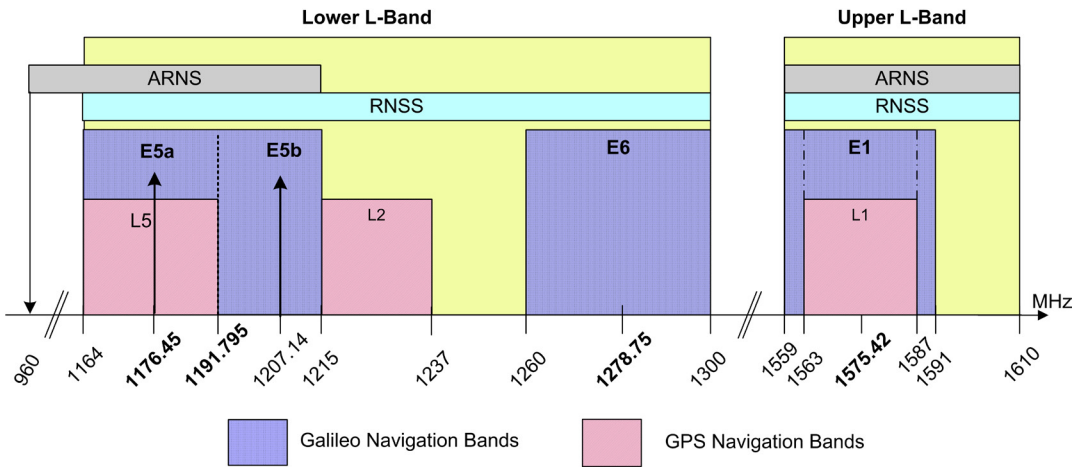


Figure 2. Galileo Frequency Plan

The Galileo frequency bands have been selected in the allocated spectrum for Radio Navigation Satellite Services (RNSS) and in addition to that, E5a, E5b and E1 bands are included in the allocated spectrum for Aeronautical Radio Navigation Services (ARNS), employed by Civil-Aviation users, and allowing dedicated safety-critical applications.

### 2.1.2. Carrier Frequencies

Galileo carrier frequencies are shown in Table 2. The names of the Galileo signals are the same than the corresponding carrier frequencies.

| Signal | Carrier Frequency (MHz) |
|---|---|
| E1 | 1575.420 |
| E6 | 1278.750 |
| E5 | 1191.795 |
| E5a | 1176.450 |
| E5b | 1207.140 |

Table 2. Carrier Frequency per Signal

Note: The E5a and E5b signals are part of the E5 signal in its full bandwidth.

### 2.1.3. Receiver Reference Bandwidths

The receiver reference bandwidths centred on the carrier frequencies of Table 2 are specified in Table 3. Those reference bandwidths are considered when computing the correlation losses provided in paragraph 2.8.

| Signal | Receiver Reference Bandwidth (MHz) |
|---|---|
| E1 | 24.552 |
| E6 | 40.920 |
| E5 | 51.150 |
| E5a | 20.460 |
| E5b | 20.460 |

Table 3. Galileo Signals Receiver Reference Bandwidths

## 2.2. Signal Polarisation

The transmitted signals are Right-Hand Circularly Polarised (RHCP).

## 2.3. Modulation

In the following sections, modulation expressions are given for the power normalised complex envelope (i.e. base-band version) $s_X(t)$ of a modulated (band-pass) signal $S_X(t)$. Both are described in terms of their in-phase $s_{X-I}(t)$ and quadrature $s_{X-Q}(t)$ components by the following generic expressions in Eq. 1.

$$S_X(t) = 2P_X\left[s_{X-I}(t)\cos(2\pi f_X t) - s_{X-Q}(t)\sin(2\pi f_X t)\right]$$
$$s_X(t) = s_{X-I}(t) + j\,s_{X-Q}(t) \qquad \text{Eq. 1}$$

Table 4 defines the signal parameters used in this chapter, with the indices:

- 'X' accounting for the respective carrier (E5, E5a, E5b, E6 or E1) and
- 'Y' accounting for the respective signal component (B, C, I or Q) within the signal 'X'.

| Parameter | Explanation | Unit |
|---|---|---|
| $f_X$ | Carrier frequency | Hz |
| $P_X$ | RF-Signal power | W |
| $L_{X\text{-}Y}$ | Ranging code repetition period | chips |
| $T_{C,X\text{-}Y}$ | Ranging code chip length | s |
| $T_{S,X}$ | Sub-carrier period | s |
| $T_{S,X\text{-}Y}$ | Sub-carrier period | s |
| $T_{D,X\text{-}Y}$ | Navigation message symbol duration | s |
| $R_{C,X\text{-}Y}$ | = $1/T_{C,X\text{-}Y}$ code chip rate | Hz |
| $R_{S,X}$ | = $1/T_{S,X}$ sub-carrier frequency | Hz |
| $R_{S,X\text{-}Y}$ | = $1/T_{S,X\text{-}Y}$ sub-carrier frequency | Hz |
| $R_{D,X\text{-}Y}$ | = $1/T_{D,X\text{-}Y}$ navigation message symbol rate | Hz |
| $S_X(t)$ | Signal band-pass representation | N/A |
| $C_{X\text{-}Y}(t)$ | Binary (NRZ modulated) ranging code | N/A |
| $D_{X\text{-}Y}(t)$ | Binary (NRZ modulated) navigation message signal | N/A |
| $sc_{X\text{-}Y}(t)$ | Binary (NRZ modulated) sub-carrier | N/A |
| $e_{X\text{-}Y}(t)$ | Binary NRZ modulated navigation signal component including code, sub-carrier (if available) and navigation message data (if available); (= $c_{X\text{-}Y}(t)\ sc_{X\text{-}Y}(t)\ D_{X\text{-}Y}(t)$) | N/A |

| Parameter | Explanation | Unit |
|---|---|---|
| $sX(t)$ | Normalised (unit mean power) baseband signal $= s_{X\text{-}I}(t)+\mathrm{j}\, s_{X\text{-}Q}(t)$ | N/A |
| $c_{X\text{-}Y,k}$ | $k^{\text{th}}$ chip of the ranging code | N/A |
| $d_{X\text{-}Y,k}$ | $k^{\text{th}}$ symbol of the navigation message | N/A |
| $DC_{X\text{-}Y}$ | $= T_{D,X\text{-}Y}/T_{C,X\text{-}Y}$ number of code chips per symbol | N/A |
| $\lvert i\rvert_L$ | $i$ modulo $L$ | N/A |
| $[i]_{DC}$ | Integer part of $i/DC$ | N/A |
| $\mathrm{rect}_T(t)$ | Function "rectangle" which is equal to 1 for $0 \leq t < T$ and equal to 0 elsewhere | N/A |

Table 4. Signal Description Parameters

### 2.3.1. E5 Signal

#### *2.3.1.1. Modulation Scheme*

The diagram in Figure 3 provides a generic view of the E5 signal AltBOC modulation generation.

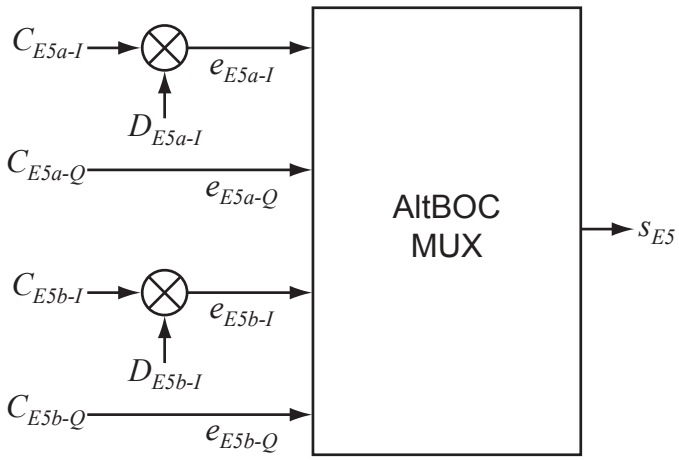


Figure 3. Modulation Scheme for the E5 Signal

The E5 signal components are generated according to the following:

- $e_{E5a\text{-}I}$ from the F/NAV navigation data stream $D_{E5a\text{-}I}$ modulated with the ranging code $C_{E5a\text{-}I}$
- $e_{E5a\text{-}Q}$ (pilot component) from the ranging code $C_{E5a\text{-}Q}$
- $e_{E5b\text{-}I}$ from the I/NAV navigation data stream $D_{E5b\text{-}I}$ modulated with the ranging code $C_{E5b\text{-}I}$
- $e_{E5b\text{-}Q}$ (pilot component) from the ranging code $C_{E5b\text{-}Q}$

The respective definitions are following (Eq. 2):

$$
\begin{aligned}
e_{E5a-I}(t) &= \sum_{i=-\infty}^{+\infty}\left[c_{E5a-I,|i|_{L_{E5a-I}}} d_{E5a-I,[i]_{DC_{E5a-I}}} \mathrm{rect}_{T_{C,E5a-I}}\left(t - iT_{C,E5a-I}\right)\right] \\
e_{E5a-Q}(t) &= \sum_{i=-\infty}^{+\infty}\left[c_{E5a-Q,|i|_{L_{E5a-Q}}} \mathrm{rect}_{T_{C,E5a-Q}}\left(t - iT_{C,E5a-Q}\right)\right] \\
e_{E5b-I}(t) &= \sum_{i=-\infty}^{+\infty}\left[c_{E5b-I,|i|_{L_{E5b-I}}} d_{E5b-I,[i]_{DC_{E5b-I}}} \mathrm{rect}_{T_{C,E5b-I}}\left(t - iT_{C,E5b-I}\right)\right] \\
e_{E5b-Q}(t) &= \sum_{i=-\infty}^{+\infty}\left[c_{E5b-Q,|i|_{L_{E5b-Q}}} \mathrm{rect}_{T_{C,E5b-Q}}\left(t - iT_{C,E5b-Q}\right)\right]
\end{aligned}
\qquad \text{Eq. 2}
$$

The Galileo satellites transmit the E5 signal components with the ranging codes chip rates and symbol rates stated in Table 5.

| Signal (Parameter X) | Component (Parameter Y) | Ranging Code Chip-Rate $R_{C,X\text{-}Y}$ (Mchip/s) | Symbol-Rate $R_{D,X\text{-}Y}$ (symbols/s) |
|---|---|---|---|
| E5a | I | 10.230 | 50 |
| | Q | 10.230 | No data ('pilot component') |
| E5b | I | 10.230 | 250 |
| | Q | 10.230 | No data ('pilot component') |

Table 5. E5 Chip Rates and Symbol Rates

### 2.3.1.2. *Modulation Type*

The wideband E5 signal is generated with the AltBOC modulation of side-band sub-carrier rate $R_{S,E5} = 1/T_{S,E5}$=15.345 MHz (15 x 1.023 MHz) according to the expression in Eq. 3 with the binary signal components $e_{E5a\text{-}I}$, $e_{E5a\text{-}Q}$, $e_{E5b\text{-}I}$ and $e_{E5b\text{-}Q}$ as defined in Eq. 2. Note that E5a and E5b signals can be processed independently by the user receiver as though they were two separate QPSK signals with a carrier frequency of 1176.45 MHz and 1207.14 MHz respectively.

$$\begin{aligned} s_{E5}(t) = {} & \frac{1}{2\sqrt{2}}\left(e_{E5a-I}(t) + j\, e_{E5a-Q}(t)\right)\left[sc_{E5-S}(t) - j\, sc_{E5-S}(t - T_{s,E5}/4)\right] + \\ & \frac{1}{2\sqrt{2}}\left(e_{E5b-I}(t) + j\, e_{E5b-Q}(t)\right)\left[sc_{E5-S}(t) + j\, sc_{E5-S}(t - T_{s,E5}/4)\right] + \\ & \frac{1}{2\sqrt{2}}\left(\bar{e}_{E5a-I}(t) + j\, \bar{e}_{E5a-Q}(t)\right)\left[sc_{E5-P}(t) - j\, sc_{E5-P}(t - T_{s,E5}/4)\right] + \\ & \frac{1}{2\sqrt{2}}\left(\bar{e}_{E5b-I}(t) + j\, \bar{e}_{E5b-Q}(t)\right)\left[sc_{E5-P}(t) + j\, sc_{E5-P}(t - T_{s,E5}/4)\right] \end{aligned} \qquad \text{Eq. 3}$$

The respective dashed signal components $\bar{e}_{E5a\text{-}I}$, $\bar{e}_{E5a\text{-}Q}$, $\bar{e}_{E5b\text{-}I}$ and $\bar{e}_{E5b\text{-}Q}$ represent product signals according to Eq. 4:

$$\begin{aligned} \bar{e}_{E5a\text{-}I} &= e_{E5a\text{-}Q}\, e_{E5b\text{-}I}\, e_{E5b\text{-}Q} & \bar{e}_{E5b\text{-}I} &= e_{E5b\text{-}Q}\, e_{E5a\text{-}I}\, e_{E5a\text{-}Q} \\ \bar{e}_{E5a\text{-}Q} &= e_{E5a\text{-}I}\, e_{E5b\text{-}I}\, e_{E5b\text{-}Q} & \bar{e}_{E5b\text{-}Q} &= e_{E5b\text{-}I}\, e_{E5a\text{-}I}\, e_{E5a\text{-}Q} \end{aligned} \qquad \text{Eq. 4}$$

The parameters $sc_{E5\text{-}S}$ and $sc_{E5\text{-}P}$ represent the four-valued sub-carrier functions for the single signals and the product signals respectively:

$$\begin{aligned} sc_{E5-S}(t) &= \sum_{i=-\infty}^{\infty} AS_{|i|_8}\, \mathrm{rect}_{T_{S,E5}/8}(t - iT_{s,E5}/8) \\ sc_{E5-P}(t) &= \sum_{i=-\infty}^{\infty} AP_{|i|_8}\, \mathrm{rect}_{T_{S,E5}/8}(t - iT_{s,E5}/8) \end{aligned} \qquad \text{Eq. 5}$$

The coefficients $AS_i$ and $AP_i$ are according to Table 6.

| i | 0 | 1 | 2 | 3 | 4 | 5 | 6 | 7 |
|---|---|---|---|---|---|---|---|---|
| $2{\cdot}AS_i$ | $\sqrt{2}+1$ | 1 | -1 | $-\sqrt{2}-1$ | $-\sqrt{2}-1$ | -1 | 1 | $\sqrt{2}+1$ |
| $2{\cdot}AP_i$ | $-\sqrt{2}+1$ | 1 | -1 | $\sqrt{2}-1$ | $\sqrt{2}-1$ | -1 | 1 | $-\sqrt{2}+1$ |

Table 6. AltBOC Sub-carrier Coefficients

One period of the sub-carrier functions $sc_{E5\text{-}S}$ and $sc_{E5\text{-}P}$ is shown in Figure 4.

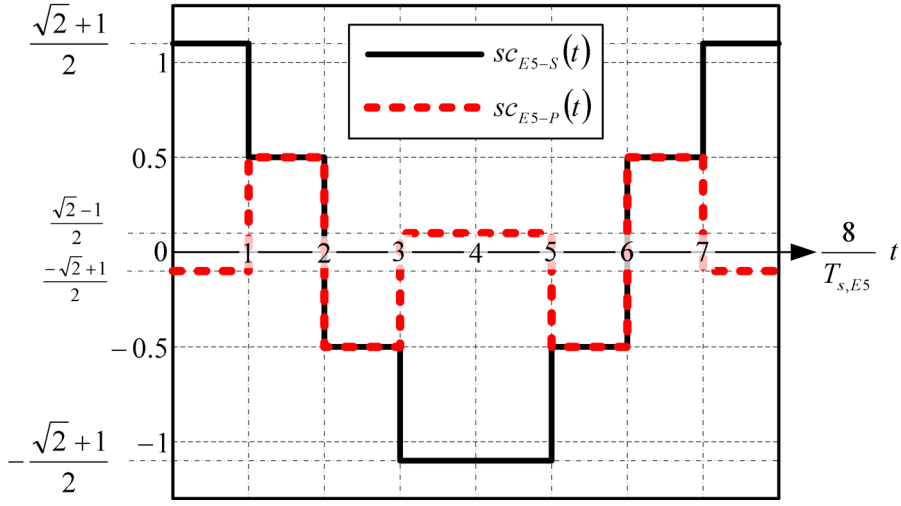


Figure 4. One Period of the Two Sub-carrier Functions Involved in AltBOC Modulation

### 2.3.1.3. *Equivalent Modulation Type*

Equivalently, the AltBOC complex baseband signal $s_{E5}(t)$ can be described as an 8-PSK signal according to Eq. 6. The corresponding phase states are illustrated in Figure 5.

$$s_{E5}(t) = \exp\left(j\frac{\pi}{4}k(t)\right) \quad \text{with} \quad k(t) \in \{1,2,3,4,5,6,7,8\}, \qquad \text{Eq. 6}$$

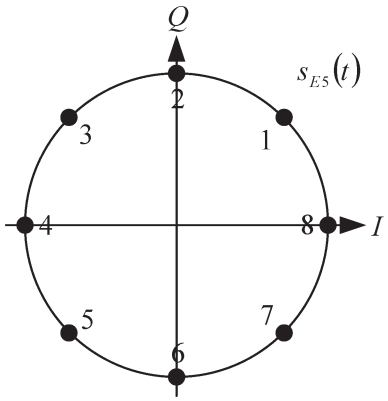


Figure 5. 8-PSK Phase-State Diagram of E5 AltBOC Signal

The relation of the 8 phase states to the 16 different possible states of the quadruple $e_{E5a\text{-}I}(t)$, $e_{E5a\text{-}Q}(t)$, $e_{E5b\text{-}I}(t)$, and $e_{E5b\text{-}Q}(t)$ depends also on time. Therefore, time is partitioned first in sub-carrier intervals $T_{s,E5}$ and further sub-divided in 8 equal sub-periods. The index $i_{Ts}$ of the actual sub-period is given by Eq. 7 and determines which relation between input quadruple and phase states has to be used.

$$i_{T_s} = \text{integer part}\left[\frac{8}{T_{s,E5}}\left(t \text{ modulo } T_{s,E5}\right)\right] \quad \text{with} \quad i_{T_s} \in \{0,1,2,3,4,5,6,7\} \qquad \text{Eq. 7}$$

The dependency of phase-states from input-quadruples and time is given in Table 7.

| | | Input Quadruples | | | | | | | | | | | | | | | |
|---|---|---|---|---|---|---|---|---|---|---|---|---|---|---|---|---|---|
| eE5a-I | | -1 | -1 | -1 | -1 | -1 | -1 | -1 | -1 | 1 | 1 | 1 | 1 | 1 | 1 | 1 | 1 |
| eE5b-I | | -1 | -1 | -1 | -1 | 1 | 1 | 1 | 1 | -1 | -1 | -1 | -1 | 1 | 1 | 1 | 1 |
| eE5a-Q | | -1 | -1 | 1 | 1 | -1 | -1 | 1 | 1 | -1 | -1 | 1 | 1 | -1 | -1 | 1 | 1 |
| eE5b-Q | | -1 | 1 | -1 | 1 | -1 | 1 | -1 | 1 | -1 | 1 | -1 | 1 | -1 | 1 | -1 | 1 |
| $t' = t$ **modulo** $T_{s,E5}$ | | $k$ according to $s_{E5}(t)=\exp(jk\pi/4)$ | | | | | | | | | | | | | | | |
| $i_{T_s}$ | $t'$ | | | | | | | | | | | | | | | | |
| 0 | $[0, T_{s,E5}/8[$ | 5 | 4 | 4 | 3 | 6 | 3 | 1 | 2 | 6 | 5 | 7 | 2 | 7 | 8 | 8 | 1 |
| 1 | $[T_{s,E5}/8, 2\ T_{s,E5}/8[$ | 5 | 4 | 8 | 3 | 2 | 3 | 1 | 2 | 6 | 5 | 7 | 6 | 7 | 4 | 8 | 1 |
| 2 | $[2\ T_{s,E5}/8, 3\ T_{s,E5}/8[$ | 1 | 4 | 8 | 7 | 2 | 3 | 1 | 2 | 6 | 5 | 7 | 6 | 3 | 4 | 8 | 5 |
| 3 | $[3\ T_{s,E5}/8, 4\ T_{s,E5}/8[$ | 1 | 8 | 8 | 7 | 2 | 3 | 1 | 6 | 2 | 5 | 7 | 6 | 3 | 4 | 4 | 5 |
| 4 | $[4\ T_{s,E5}/8, 5\ T_{s,E5}/8[$ | 1 | 8 | 8 | 7 | 2 | 7 | 5 | 6 | 2 | 1 | 3 | 6 | 3 | 4 | 4 | 5 |
| 5 | $[5\ T_{s,E5}/8, 6\ T_{s,E5}/8[$ | 1 | 8 | 4 | 7 | 6 | 7 | 5 | 6 | 2 | 1 | 3 | 2 | 3 | 8 | 4 | 5 |
| 6 | $[6\ T_{s,E5}/8, 7\ T_{s,E5}/8[$ | 5 | 8 | 4 | 3 | 6 | 7 | 5 | 6 | 2 | 1 | 3 | 2 | 7 | 8 | 4 | 1 |
| 7 | $[7\ T_{s,E5}/8, T_{s,E5}[$ | 5 | 4 | 4 | 3 | 6 | 7 | 5 | 2 | 6 | 1 | 3 | 2 | 7 | 8 | 8 | 1 |

Table 7. Look-up Table for AltBOC Phase States

### 2.3.2. E6 Signal

Figure 6 provides a generic view of the E6 signal generation.

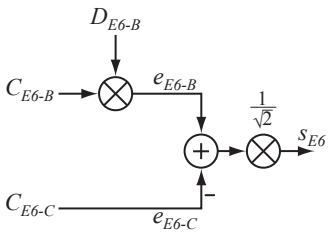


Figure 6. Modulation Scheme for the E6 Signal

The E6 signal B and C components are generated according to the following

- $e_{E6\text{-}B}$ from the C/NAV navigation data stream $D_{E6\text{-}B}$ modulated with the ranging code $C_{E6\text{-}B}$
- $e_{E6\text{-}C}$ (pilot component) from the ranging code $C_{E6\text{-}C}$

Equation 8 provides their mathematical description.

$$e_{E6-B}(t) = \sum_{i=-\infty}^{+\infty} \left[ c_{E6-B,|i|_{L_{E6-B}}} d_{E6-B,[i]_{DC_{E6-B}}} \mathrm{rect}_{T_{C,E6-B}}(t - iT_{C,E6-B}) \right]$$

$$e_{E6-C}(t) = \sum_{i=-\infty}^{+\infty} \left[ c_{E6-C,|i|_{L_{E6-C}}} \mathrm{rect}_{T_{C,E6-C}}(t - iT_{C,E6-C}) \right]$$

Eq. 8

Ranging code $C_{E6\text{-}C}$ may be encrypted in the future. The Galileo satellites transmit the E6 signal components with the ranging codes chip rates and symbol rates stated in Table 8.

| **Component (Parameter Y)** | **Ranging Code Chip-Rate $R_{C,E6\text{-}Y}$ (MChip/s)** | **Symbol-Rate $R_{D,E6\text{-}Y}$ (symbols/s)** |
|---|---|---|
| B | 5.115 | 1000 |
| C | 5.115 | No data ('pilot component') |

Table 8. E6 Chip Rates and Symbol Rates

The E6 signal is generated according to Eq. 9, with the binary signal components $e_{E6\text{-}B}(t)$ and $e_{E6\text{-}C}(t)$.

$$s_{E6}(t) = \frac{1}{\sqrt{2}}\left[e_{E6-B}(t) - e_{E6-C}(t)\right] \qquad \text{Eq. 9}$$

Note: both pilot and data components are combined on the same carrier component, with a power sharing of 50 percent.

### 2.3.3. E1 Signal

Figure 7 provides a generic view of the E1 CBOC signal generation.

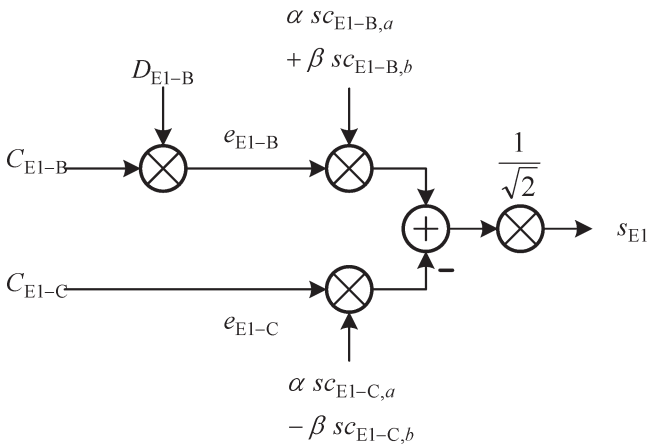


Figure 7. Modulation Scheme for the E1 CBOC Signal

The E1 CBOC signal components are generated as follows:

- $e_{E1\text{-}B}$ from the I/NAV navigation data stream $D_{E1\text{-}B}$ and the ranging code $C_{E1\text{-}B}$, then modulated with the sub-carriers $sc_{E1\text{-}B,a}$ and $sc_{E1\text{-}B,b}$
- $e_{E1\text{-}C}$ (pilot component) from the ranging code $C_{E1\text{-}C}$ including its secondary code, then modulated with the sub-carriers $sc_{E1\text{-}C,a}$ and $sc_{E1\text{-}C,b}$

Equation 10 provides the mathematical description of these components.

$$e_{E1-B}(t) = \sum_{i=-\infty}^{\infty}\left[c_{E1-B,|i|_{L_{E1-B}}} D_{E1-B,|i|_{DC_{E1-B}}} \mathrm{rect}_{T_{c,E1-B}}(t - iT_{c,E1-B})\right]$$

$$e_{E1-C}(t) = \sum_{i=-\infty}^{\infty}\left[c_{E1-C,|i|_{L_{E1-C}}} \mathrm{rect}_{T_{c,E1-C}}(t - iT_{c,E1-C})\right] \qquad \text{Eq.10}$$

Galileo satellites transmit ranging signals for the E1 signal with the chip rates and sub-carrier rates defined in the following Table 9.

| Component (Parameter Y) | Sub-carrier Type | Sub-carrier Rate | | Ranging Code Chip-Rate $R_{C,E1\text{-}Y}$ (Mcps) |
|---|---|---|---|---|
| | | $R_{S,E1\text{-}Y,a}$ (MHz) | $R_{S,E1\text{-}Y,b}$ (MHz) | |
| B | CBOC, in-phase | 1.023 | 6.138 | 1.023 |
| C | CBOC, anti-phase | 1.023 | 6.138 | 1.023 |

Table 9. E1 CBOC Chip Rates and Sub-carrier Rates

The navigation data message stream, after channel encoding, is transmitted with the symbol rate as stated in Table 10.

| Component (Parameter Y) | Symbol Rate $R_{D,E1\text{-}Y}$ (symbols/s) |
|---|---|
| B | 250 |
| C | No data ('pilot component') |

Table 10. E1-B/C Symbol Rates

The E1-B/C composite signal is then generated according to equation Eq. 11 below, with the binary signal components $e_{E1\text{-}B}(t)$ and $e_{E1\text{-}C}(t)$. Note that as for E6, both pilot and data components are modulated onto the same carrier component, with a power sharing of 50 percent.

$$s_{E1}(t) = \frac{1}{\sqrt{2}}\left(e_{E1-B}(t)\left(\alpha\, sc_{E1-B,a}(t) + \beta\, sc_{E1-B,b}(t)\right) - e_{E1-C}(t)\left(\alpha\, sc_{Ei-C,a}(t) - \beta\, sc_{Ei-C,b}(t)\right)\right)$$

Eq. 11

$$\text{with } sc_X(t) = \text{sgn}(\sin\left(2\pi R_{s,X} t\right))$$

The parameters $\alpha$ and $\beta$ are chosen such that the combined power of the $sc_{E1\text{-}B,b}$ and the $sc_{E1\text{-}C,b}$ sub carrier components equals 1/11 of the total power of $e_{E1\text{-}B}$ plus $e_{E1\text{-}C}$, before application of any bandwidth limitation. This yields:

$$a = \sqrt{\frac{10}{11}} \quad \text{and} \quad b = \sqrt{\frac{1}{11}}$$

One period of the sub-carrier function $\alpha\, sc_{E1\text{-}B,a}(t) + \beta\, sc_{E1\text{-}B,b}(t)$ for the E1-B signal component and one period of the sub-carrier function $\alpha\, sc_{E1\text{-}C,a}(t) - \beta\, sc_{E1\text{-}C,b}(t)$ for the E1-C signal component are shown in the following figure

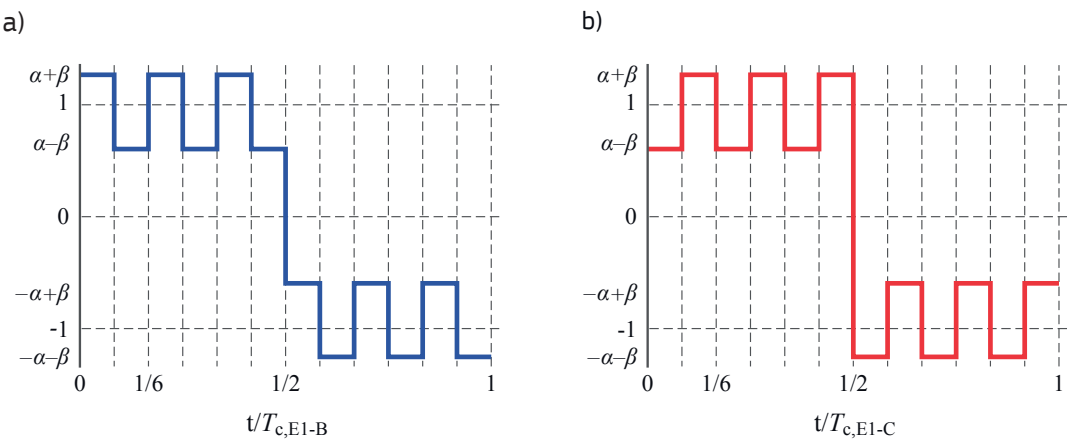


Figure 8. One period of the CBOC sub-carrier for a) the E1-B signal component, and b) the E1-C signal component

## 2.4. Logic Levels

The correspondence between the logic level code bits used to modulate the signal and the signal level is according to the values stated in Table 11.

| Logic Level | Signal Level |
|---|---|
| 1 | -1.0 |
| 0 | +1.0 |

Table 11. Logic to Signal Level Assignment

## 2.5. Transmitted Signal Phase Noise

The phase noise spectral density of the un-modulated carrier will allow a second-order phase locked loop with 10 Hz one-sided noise bandwidth to track the carrier to an accuracy of 0.04 radians RMS.

## 2.6. Transmitted Signals Code/Data Coherency

The edge of each data symbol coincides with the edge of a code chip. Periodic spreading codes start coincides with the start of a data symbol.

The edge of each secondary code chip coincides with the edge of a primary code chip. Primary code start coincides with the start of a secondary code chip.

## 2.7. Received Power Levels on Ground

The Galileo satellites provide Galileo E5, E6 and E1 signal strengths that meet the minimum levels of received power on ground as specified in Table 12, for user elevation angles above 5 degrees. The minimum received power on ground is measured at the output of an ideally matched RHCP 0 dBi user receiving antenna.

Assuming the same receiving antenna, the Galileo terrestrial user's received signal power is not expected to exceed the maximum levels specified in Table 12.

| Signal | Signal Component | Total Received Minimum Power (dBW) | Total Received Maximum Power (dBW) |
|---|---|---|---|
| E5 | E5a (total I+Q)<br>(50/50% I/Q power sharing) | -155.25 | -150 |
| | E5b (total I+Q)<br>(50/50% I/Q power sharing) | -155.25 | -150 |
| E6 | E6-B/C (total B+C)<br>(50/50% E6-B/E6-C power sharing) | -155.25 | -150 |
| E1 | E1-B/C (total B+C)<br>(50/50% E1-B/E1-C power sharing) | -157.25 | -152 |

Table 12. Minimum and Maximum Received Power Levels on Ground

For the purpose of user receiver design and test, a dynamic range of up to 7 dB above the corresponding minimum power levels should be considered.

## 2.8. Payload and Component Reception Losses

For each signal component, the correlation loss due to payload distortions will be below 0.6 dB.

For the reference receiver bandwidths defined in section 2.1.3, additional losses due to receiver filtering are to be considered, as shown in Table 13.

| Signal | Loss (dB) |
|---|---|
| E1 | 0.1 |
| E6 | 0.0 |
| E5 | 0.4 |
| E5a | 0.6 |
| E5b | 0.6 |

Table 13. Additional Losses due to Receiver Filtering

# 3. Galileo Spreading Codes Characteristics

## 3.1. Code Lengths

The ranging codes are built from so-called primary and secondary codes by using a tiered codes construction described in paragraph 3.2. The code lengths to be used for each signal component are stated in Table 14. Note that the E6 ranging codes are not subject of this SIS ICD.

| Signal Component | Tiered Code Period (ms) | Code Length (chips) | |
|---|---|---|---|
| | | Primary | Secondary |
| E5a-I | 20 | 10230 | 20 |
| E5a-Q | 100 | 10230 | 100 |
| E5b-I | 4 | 10230 | 4 |
| E5b-Q | 100 | 10230 | 100 |
| E1-B | 4 | 4092 | N/A |
| E1-C | 100 | 4092 | 25 |

Table 14. Code Lengths

## 3.2. Tiered Codes Generation

Long spreading codes are generated by a tiered code construction, whereby a secondary code sequence is used to modify successive repetitions of a primary code, as shown in Figure 9 for a primary code of length $N$ and chip rate $f_c$, and a secondary code of length $N_S$ and chip rate $f_{cs} = f_c/N$. The duration of N chips is also called a primary code epoch in Figure 9. In logical representation, the secondary code chips are sequentially exclusive-ored with the primary code, always one chip of the secondary code per period of the primary code.

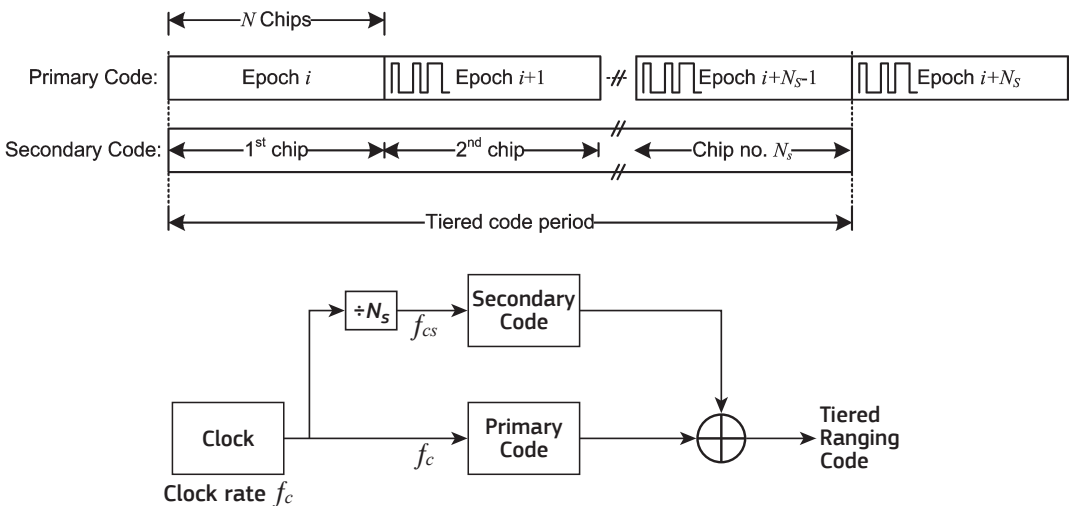


Figure 9. Tiered Codes Generation

## 3.3. Primary Codes Generation

The primary spreading codes can be either

- Linear feedback shift register-based pseudo-noise sequences, or
- Optimised pseudo-noise sequences

Optimised codes need to be stored in memory and therefore are often called 'memory codes'. Register based codes used in Galileo are generated as combinations of two M-sequences, being truncated to the appropriate length. These codes can be generated either with pairs of LFSR or might be also stored in memory.

Figure 10 shows an example standard implementation of the LFSR method for the generation of truncated and combined M sequences. Two parallel shift registers are used: base register 1 and base register 2. The primary code output sequence is the exclusive OR of base register 1 and 2 output sequences, the shift between these two sequences is zero. Each shift register $i$ ($i$=1 for base register 1 and $i$ = 2 base register 2) of length $R$ is fed back with a particular set of feedback taps $\{a_{i,j}\}_{j=1...R} = [a_{i,1}, a_{i,2}, ..., a_{i,R}]$ and its content is represented by a vector $\{c_{i,j}\}_{j=1...R} = [c_{i,1}, c_{i,2}, ..., c_{i,R}]$. For truncation to primary code length $N$, the content of the two shift registers is reinitialised (reset) after $N$ cycles with the so-called start-values $\{s_{i,j}\}_{j=1...R} = [s_{i,1}, s_{i,2}, ..., s_{i,R}]$.

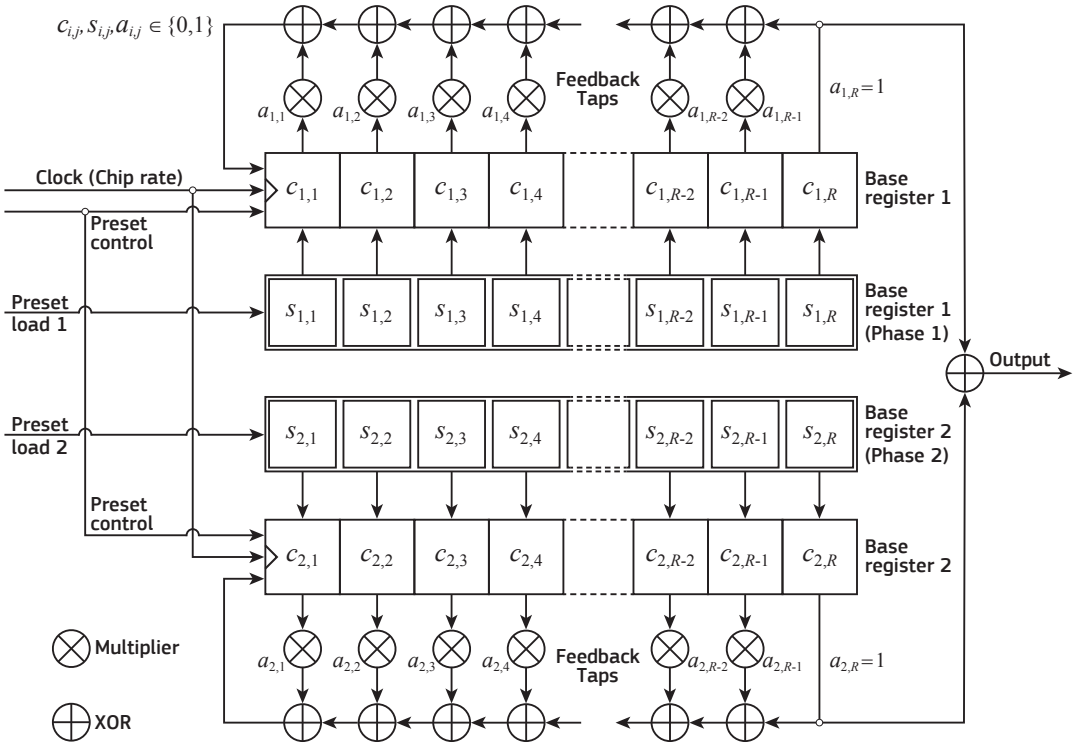


Figure 10. LFSR Based Code Generator for Truncated and Combined M-sequences

## 3.4. Primary Codes Definition

### 3.4.1. E5 Primary Codes

The E5a-I, E5a-Q, E5b-I and E5b-Q primary codes are generated via LFSR, using the principle defined in paragraph 3.3, and the parameters defined in Table 15. Note that each set of codes for each signal component comprises 50 members.

| Component | Shift Register Length (polynomial order) | Feedback Taps (octal) | |
|---|---|---|---|
| | | Register 1 | Register 2 |
| E5a-I | 14 | 40503 | 50661 |
| E5a-Q | 14 | 40503 | 50661 |
| E5b-I | 14 | 64021 | 51445 |
| E5b-Q | 14 | 64021 | 43143 |

Table 15. E5 Primary Codes Specifications

The transformation between the octal notation and the vector description $\{a_{i,j}\}$ for the feedback tap positions is defined as follows and is illustrated with an example (Register 1 for E5a-I in Table 15) in Figure 11. After transferring the octal vector notation into binary notation, the bits are counted right to left starting with $j$ = 0 from the LSB and ending with $j = R$ at the MSB, where $R$ is the code register length. Then the $j^{th}$ bit applies for the feedback tap $a_{i,j}$ for $j$ = 1, ..., $R$, as shown in Figure 10. Note: $a_{i,R}$ is always one and $a_{i,0}$ is not considered in the register feedback tap.

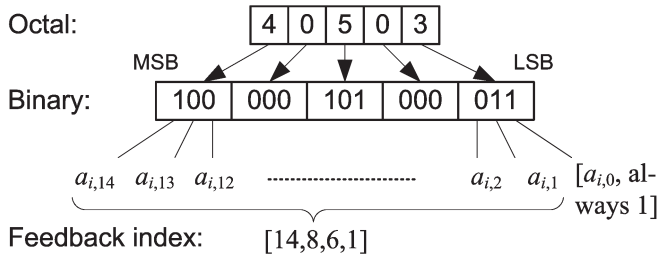


Figure 11. Code Register Feedback Taps Representation (example for E5a-I)

The start values for all base register 1 cells, in logic level notation, are '1' for all codes of E5a-I, E5a-Q, E5b-I and E5b-Q. The start values of base register 2 are provided in the subsequent sections. The transformation between the octal notation and the vector description $\{s_{i,j}\}$ for the register start values is defined as follows and is illustrated with an example in Figure 12 (code number 1 of E5a-I in Table 16). After transferring the octal notation in binary notation, the bits are counted right to left starting with $j$=1 (Note: the different start value compared to the feedback taps definition) from the LSB and ending with $j=R$ at the MSB, where $R$ is the code register length. Then the $j^{th}$ bit applies to the start value $s_{i,j}$ for $j$ = 1, ..., $R$, as shown in Figure 10. Note: in this example the MSB is zero in order to complete the 14-bits binary value sequence to fit into a sequence of octal symbols.

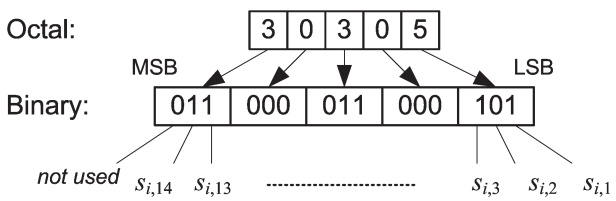


Figure 12. Start Value Representation for Base Register 2 (first code of E5a-I)

### *3.4.1.1. Base Register 2 Start Value for E5a-I*

The octal format base register 2 start value with the convention defined in paragraph 3.4.1 is as defined in Table 16 for each primary E5a-I code. In addition, the conventional hexadecimal format of the first 24 code chips of the E5a-I primary codes is given in the table. For example, the first 24 chips of the E5a-I primary code N°1 in Table 16 are 0 0 1 1 1 1 0 0 1 1 1 0 1 0 1 0 1 0 0 1 1 1 0 1, the first binary value corresponding to the first primary code chip in time.

| Code No | Start Value | Initial Sequence | Code No | Start Value | Initial Sequence |
|---|---|---|---|---|---|
| 1 | 30305 | 3CEA9D | 26 | 14401 | 9BFAC7 |
| 2 | 14234 | 9D8CF1 | 27 | 34727 | 18A25B |
| 3 | 27213 | 45D1C8 | 28 | 22627 | 69A39F |
| 4 | 20577 | 7A0133 | 29 | 30623 | 39B27D |
| 5 | 23312 | 64D423 | 30 | 27256 | 454598 |
| 6 | 33463 | 23300D | 31 | 01520 | F2BC62 |
| 7 | 15614 | 91CEF2 | 32 | 14211 | 9DDBC6 |
| 8 | 12537 | AA82DC | 33 | 31465 | 332827 |
| 9 | 01527 | F2A17D | 34 | 22164 | 6E2FCA |
| 10 | 30236 | 3D84AE | 35 | 33516 | 22C6D5 |
| 11 | 27344 | 446D38 | 36 | 02737 | E881D9 |
| 12 | 07272 | C514F2 | 37 | 21316 | 74C4DB |
| 13 | 36377 | 0C0184 | 38 | 35425 | 13AB03 |
| 14 | 17046 | 8767E0 | 39 | 35633 | 119323 |
| 15 | 06434 | CB8EFF | 40 | 24655 | 594886 |
| 16 | 15405 | 93EBCD | 41 | 14054 | 9F4D89 |
| 17 | 24252 | 5D55CE | 42 | 27027 | 47A3C0 |
| 18 | 11631 | B19B7C | 43 | 06604 | C9ED53 |
| 19 | 24776 | 5805FC | 44 | 31455 | 334994 |
| 20 | 00630 | F99EA1 | 45 | 34465 | 1B2A30 |
| 21 | 11560 | B23CE5 | 46 | 25273 | 5513F3 |
| 22 | 17272 | 8515E8 | 47 | 20763 | 7831C1 |
| 23 | 27445 | 436822 | 48 | 31721 | 30B93A |
| 24 | 31702 | 30F77B | 49 | 17312 | 84D5B4 |
| 25 | 13012 | A7D629 | 50 | 13277 | A5029C |

Table 16. Base Register 2 Start Values and First Code Chip for E5a-I

#### *3.4.1.2. Base Register 2 Start Value for E5a-Q*

The octal format base register 2 start value with the convention defined in paragraph 3.4.1 is as defined in Table 17 for each E5a-Q primary code. The hexadecimal format of the first 24 code chips with the convention defined in paragraph 3.4.1.1 is also given.

| Code No | Start Value | Initial Sequence | Code No | Start Value | Initial Sequence |
|---|---|---|---|---|---|
| 1 | 25652 | 515537 | 26 | 20606 | 79E450 |
| 2 | 05142 | D67539 | 27 | 11162 | B63460 |
| 3 | 24723 | 58B2E5 | 28 | 22252 | 6D562B |
| 4 | 31751 | 305914 | 29 | 30533 | 3A9010 |
| 5 | 27366 | 442710 | 30 | 24614 | 59CD72 |
| 6 | 24660 | 593CF8 | 31 | 07767 | C0211A |

| Code No | Start Value | Initial Sequence | Code No | Start Value | Initial Sequence |
|---|---|---|---|---|---|
| 7 | 33655 | 214AD7 | 32 | 32705 | 28EB96 |
| 8 | 27450 | 435EA6 | 33 | 05052 | D7554B |
| 9 | 07626 | C1A7D5 | 34 | 27553 | 425126 |
| 10 | 01705 | F0E94A | 35 | 03711 | E0DAFB |
| 11 | 12717 | A8C239 | 36 | 02041 | EF79F2 |
| 12 | 32122 | 2EB63B | 37 | 34775 | 18085D |
| 13 | 16075 | 8F0A46 | 38 | 05274 | D50CD8 |
| 14 | 16644 | 896DD4 | 39 | 37356 | 0447B9 |
| 15 | 37556 | 0245F1 | 40 | 16205 | 8DE877 |
| 16 | 02477 | EB0160 | 41 | 36270 | 0D1FA0 |
| 17 | 02265 | ED28B3 | 42 | 06600 | C9FCF7 |
| 18 | 06430 | CB9F5B | 43 | 26773 | 48116D |
| 19 | 25046 | 576592 | 44 | 17375 | 840BCC |
| 20 | 12735 | A88811 | 45 | 35267 | 152004 |
| 21 | 04262 | DD3649 | 46 | 36255 | 0D4897 |
| 22 | 11230 | B59F42 | 47 | 12044 | AF6D25 |
| 23 | 00037 | FF81F6 | 48 | 26442 | 4B7593 |
| 24 | 06137 | CE8128 | 49 | 21621 | 71BB1B |
| 25 | 04312 | DCD55C | 50 | 25411 | 53DA0E |

Table 17. Base Register 2 start Values and First Code Chip for E5a-Q

#### *3.4.1.3. Base Register 2 Start Value for E5b-I*

The octal format base register 2 start value with the conventions defined in paragraph 3.4.1 is as defined in Table 18 for each E5b-I primary code. The hexadecimal format of the first 24 code chips with the conventions defined in paragraph 3.4.1.1 is also given.

| Code No | Start Value | Initial Sequence | Code No | Start Value | Initial Sequence |
|---|---|---|---|---|---|
| 1 | 07220 | C5BEA1 | 26 | 25664 | 512FA9 |
| 2 | 26047 | 4F6248 | 27 | 21403 | 73F36B |
| 3 | 00252 | FD5488 | 28 | 32253 | 2D5317 |
| 4 | 17166 | 86277B | 29 | 02337 | EC8390 |
| 5 | 14161 | 9E39D5 | 30 | 30777 | 380374 |
| 6 | 02540 | EA7EDE | 31 | 27122 | 46B4DE |
| 7 | 01537 | F28321 | 32 | 22377 | 6C01D9 |
| 8 | 26023 | 4FB0C9 | 33 | 36175 | 0E0BB6 |
| 9 | 01725 | F0AB64 | 34 | 33075 | 2708C7 |
| 10 | 20637 | 79833B | 35 | 33151 | 265B55 |
| 11 | 02364 | EC2D91 | 36 | 13134 | A68E1C |

| Code No | Start Value | Initial Sequence | Code No | Start Value | Initial Sequence |
|---|---|---|---|---|---|
| 12 | 27731 | 409B11 | 37 | 07433 | C3916E |
| 13 | 30640 | 397E16 | 38 | 10216 | BDC595 |
| 14 | 34174 | 1E0FCD | 39 | 35466 | 1327D0 |
| 15 | 06464 | CB2F5A | 40 | 02533 | EA921F |
| 16 | 07676 | C1079A | 41 | 05351 | D45869 |
| 17 | 32231 | 2D9BC6 | 42 | 30121 | 3EB98A |
| 18 | 10353 | BC5146 | 43 | 14010 | 9FDE16 |
| 19 | 00755 | F848B0 | 44 | 32576 | 2A04CA |
| 20 | 26077 | 4F01E8 | 45 | 30326 | 3CA56F |
| 21 | 11644 | B16C9B | 46 | 37433 | 03928A |
| 22 | 11537 | B2827D | 47 | 26022 | 4FB5B9 |
| 23 | 35115 | 16C809 | 48 | 35770 | 101EC7 |
| 24 | 20452 | 7B570F | 49 | 06670 | C91D4F |
| 25 | 34645 | 1969C0 | 50 | 12017 | AFC22B |

Table 18. Base Register 2 Start Values and First Code Chip for E5b-I

#### *3.4.1.4. Base Register 2 Start Value for E5b-Q*

The octal format base register 2 start value with the conventions defined in paragraph 3.4.1 is as defined in Table 19 for each E5b-Q primary code. The hexadecimal format of the first 24 code chips with the conventions defined in paragraph 3.4.1.1 is also given.

| Code No | Start Value | Initial Sequence | Code No | Start Value | Initial Sequence |
|---|---|---|---|---|---|
| 1 | 03331 | E49AF0 | 26 | 20134 | 7E8CFB |
| 2 | 06143 | CE701F | 27 | 11262 | B536C3 |
| 3 | 25322 | 54B709 | 28 | 10706 | B8E68C |
| 4 | 23371 | 641AB1 | 29 | 34143 | 1E7272 |
| 5 | 00413 | FBD0AE | 30 | 11051 | B75B69 |
| 6 | 36235 | 0D8BC9 | 31 | 25460 | 533F65 |
| 7 | 17750 | 805FA5 | 32 | 17665 | 812B41 |
| 8 | 04745 | D86BA0 | 33 | 32354 | 2C4DE1 |
| 9 | 13005 | A7E921 | 34 | 21230 | 759E2C |
| 10 | 37140 | 067E55 | 35 | 20146 | 7E6434 |
| 11 | 30155 | 3E4B58 | 36 | 11362 | B43640 |
| 12 | 20237 | 7D82FB | 37 | 37246 | 05671B |
| 13 | 03461 | E33BC2 | 38 | 16344 | 8C6FE0 |
| 14 | 31662 | 31372C | 39 | 15034 | 978D4E |
| 15 | 27146 | 46676F | 40 | 25471 | 5319BF |
| 16 | 05547 | D2613E | 41 | 25646 | 516499 |
| 17 | 02456 | EB443C | 42 | 22157 | 6E4292 |

| Code No | Start Value | Initial Sequence | Code No | Start Value | Initial Sequence |
|---|---|---|---|---|---|
| 18 | 30013 | 3FD0B1 | 43 | 04336 | DC86A3 |
| 19 | 00322 | FCB7CF | 44 | 16356 | 8C46BE |
| 20 | 10761 | B83815 | 45 | 04075 | DF0B03 |
| 21 | 26767 | 48224A | 46 | 02626 | E9A5B2 |
| 22 | 36004 | 0FEE25 | 47 | 11706 | B0E553 |
| 23 | 30713 | 38D33B | 48 | 37011 | 07DBAC |
| 24 | 07662 | C135B9 | 49 | 27041 | 4778E4 |
| 25 | 21610 | 71DE13 | 50 | 31024 | 37AF4F |

Table 19. Base Register 2 Start Values and First Code Chip for E5b-Q

### 3.4.2. E1-B and E1-C Primary Codes

The E1-B and E1-C primary codes are pseudo-random memory code sequences according to the hexadecimal representation provided in Annex C (provided only in the electronic version of this ICD). Note that each set of codes for each signal component comprises 50 members.

## *3.5. Secondary Codes*

### 3.5.1. Definition of Secondary Codes

The secondary codes are fixed sequences as defined in hexadecimal notation in Table 20 and Table 21, following again the convention used in paragraph 3.4.1.1. For secondary codes whose length is not divisible by four (case of $CS25_1$ only), the last (most right-hand) hexadecimal symbol is obtained by filling up the last group of code chips with zeros at the end in time (to the right), to reach a final length of 4 binary symbols. Those two tables provide as well the code identifiers together with the code lengths, the number of hexadecimal symbols and the number of filled zeros.

For example, the $CS25_1$ secondary code in Table 20 corresponds to the binary sequence '0 0 1 1 1 0 0 0 0 0 0 1 0 1 0 1 1 0 1 1 0 0 1 0', the first binary value corresponding to the first secondary code chip in time.

| Code Identifier | Code Length | No. of Hexadec. Symbols | Number of Filled up Zeros | Code Sequence |
|---|---|---|---|---|
| $CS4_1$ | 4 | 1 | 0 | E |
| $CS20_1$ | 20 | 5 | 0 | 842E9 |
| $CS25_1$ | 25 | 7 | 3 | 380AD90 |
| $CS100_1$ | 100 | 25 | 0 | 83F6F69D8F6E15411FB8C9B1C |
| $CS100_2$ | 100 | 25 | 0 | 66558BD3CE0C7792E83350525 |
| $CS100_3$ | 100 | 25 | 0 | 59A025A9C1AF0651B779A8381 |
| $CS100_4$ | 100 | 25 | 0 | D3A32640782F7B18E4DF754B7 |
| $CS100_5$ | 100 | 25 | 0 | B91FCAD7760C218FA59348A93 |
| $CS100_6$ | 100 | 25 | 0 | BAC77E933A779140F094FBF98 |

| Code Identifier | Code Length | No. of Hexadec. Symbols | Number of Filled up Zeros | Code Sequence |
|---|---|---|---|---|
| $CS100_{7}$ | 100 | 25 | 0 | 537785DE280927C6B58BA6776 |
| $CS100_{8}$ | 100 | 25 | 0 | EFCAB4B65F38531ECA22257E2 |
| $CS100_{9}$ | 100 | 25 | 0 | 79F8CAE838475EA5584BEFC9B |
| $CS100_{10}$ | 100 | 25 | 0 | CA5170FEA3A810EC606B66494 |
| $CS100_{11}$ | 100 | 25 | 0 | 1FC32410652A2C49BD845E567 |
| $CS100_{12}$ | 100 | 25 | 0 | FE0A9A7AFDAC44E42CB95D261 |
| $CS100_{13}$ | 100 | 25 | 0 | B03062DC2B71995D5AD8B7DBE |
| $CS100_{14}$ | 100 | 25 | 0 | F6C398993F598E2DF4235D3D5 |
| $CS100_{15}$ | 100 | 25 | 0 | 1BB2FB8B5BF24395C2EF3C5A1 |
| $CS100_{16}$ | 100 | 25 | 0 | 2F920687D238CC7046EF6AFC9 |
| $CS100_{17}$ | 100 | 25 | 0 | 34163886FC4ED7F2A92EFDBB8 |
| $CS100_{18}$ | 100 | 25 | 0 | 66A872CE47833FB2DFD5625AD |
| $CS100_{19}$ | 100 | 25 | 0 | 99D5A70162C920A4BB9DE1CA8 |
| $CS100_{20}$ | 100 | 25 | 0 | 81D71BD6E069A7ACCBEDC66CA |
| $CS100_{21}$ | 100 | 25 | 0 | A654524074A9E6780DB9D3EC6 |
| $CS100_{22}$ | 100 | 25 | 0 | C3396A101BEDAF623CFC5BB37 |
| $CS100_{23}$ | 100 | 25 | 0 | C3D4AB211DF36F2111F2141CD |
| $CS100_{24}$ | 100 | 25 | 0 | 3DFF25EAE761739265AF145C1 |
| $CS100_{25}$ | 100 | 25 | 0 | 994909E0757D70CDE389102B5 |
| $CS100_{26}$ | 100 | 25 | 0 | B938535522D119F40C25FDAEC |
| $CS100_{27}$ | 100 | 25 | 0 | C71AB549C0491537026B390B7 |
| $CS100_{28}$ | 100 | 25 | 0 | 0CDB8C9E7B53F55F5B0A0597B |
| $CS100_{29}$ | 100 | 25 | 0 | 61C5FA252F1AF81144766494F |
| $CS100_{30}$ | 100 | 25 | 0 | 626027778FD3C6BB4BAA7A59D |
| $CS100_{31}$ | 100 | 25 | 0 | E745412FF53DEBD03F1C9A633 |
| $CS100_{32}$ | 100 | 25 | 0 | 3592AC083F3175FA724639098 |
| $CS100_{33}$ | 100 | 25 | 0 | 52284D941C3DCAF2721DDB1FD |
| $CS100_{34}$ | 100 | 25 | 0 | 73B3D8F0AD55DF4FE814ED890 |
| $CS100_{35}$ | 100 | 25 | 0 | 94BF16C83BD7462F6498E0282 |
| $CS100_{36}$ | 100 | 25 | 0 | A8C3DE1AC668089B0B45B3579 |
| $CS100_{37}$ | 100 | 25 | 0 | E23FFC2DD2C14388AD8D6BEC8 |
| $CS100_{38}$ | 100 | 25 | 0 | F2AC871CDF89DDC06B5960D2B |
| $CS100_{39}$ | 100 | 25 | 0 | 06191EC1F622A77A526868BA1 |
| $CS100_{40}$ | 100 | 25 | 0 | 22D6E2A768E5F35FFC8E01796 |
| $CS100_{41}$ | 100 | 25 | 0 | 25310A06675EB271F2A09EA1D |
| $CS100_{42}$ | 100 | 25 | 0 | 9F7993C621D4BEC81A0535703 |
| $CS100_{43}$ | 100 | 25 | 0 | D62999EACF1C99083C0B4A417 |

| Code Identifier | Code Length | No. of Hexadec. Symbols | Number of Filled up Zeros | Code Sequence |
|---|---|---|---|---|
| $CS100_{44}$ | 100 | 25 | 0 | F665A7EA441BAA4EA0D01078C |
| $CS100_{45}$ | 100 | 25 | 0 | 46F3D3043F24CDEABD6F79543 |
| $CS100_{46}$ | 100 | 25 | 0 | E2E3E8254616BD96CEFCA651A |
| $CS100_{47}$ | 100 | 25 | 0 | E548231A82F9A01A19DB5E1B2 |
| $CS100_{48}$ | 100 | 25 | 0 | 265C7F90A16F49EDE2AA706C8 |
| $CS100_{49}$ | 100 | 25 | 0 | 364A3A9EB0F0481DA0199D7EA |
| $CS100_{50}$ | 100 | 25 | 0 | 9810A7A898961263A0F749F56 |

Table 20. Secondary Code Sequences (Part 1)

| Code Identifier | Code Length | No. of Hexadec. Symbols | Number of Filled up Zeros | Code Sequence |
|---|---|---|---|---|
| $CS100_{51}$ | 100 | 25 | 0 | CFF914EE3C6126A49FD5E5C94 |
| $CS100_{52}$ | 100 | 25 | 0 | FC317C9A9BF8C6038B5CADAB3 |
| $CS100_{53}$ | 100 | 25 | 0 | A2EAD74B6F9866E414393F239 |
| $CS100_{54}$ | 100 | 25 | 0 | 72F2B1180FA6B802CB84DF997 |
| $CS100_{55}$ | 100 | 25 | 0 | 13E3AE93BC52391D09E84A982 |
| $CS100_{56}$ | 100 | 25 | 0 | 77C04202B91B22C6D3469768E |
| $CS100_{57}$ | 100 | 25 | 0 | FEBC592DD7C69AB103D0BB29C |
| $CS100_{58}$ | 100 | 25 | 0 | 0B494077E7C66FB6C51942A77 |
| $CS100_{59}$ | 100 | 25 | 0 | DD0E321837A3D52169B7B577C |
| $CS100_{60}$ | 100 | 25 | 0 | 43DEA90EA6C483E7990C3223F |
| $CS100_{61}$ | 100 | 25 | 0 | 0366AB33F0167B6FA979DAE18 |
| $CS100_{62}$ | 100 | 25 | 0 | 99CCBBFAB1242CBE31E1BD52D |
| $CS100_{63}$ | 100 | 25 | 0 | A3466923CEFDF451EC0FCED22 |
| $CS100_{64}$ | 100 | 25 | 0 | 1A5271F22A6F9A8D76E79B7F0 |
| $CS100_{65}$ | 100 | 25 | 0 | 3204A6BB91B49D1A2D3857960 |
| $CS100_{66}$ | 100 | 25 | 0 | 32F83ADD43B599CBFB8628E5B |
| $CS100_{67}$ | 100 | 25 | 0 | 3871FB0D89DB77553EB613CC1 |
| $CS100_{68}$ | 100 | 25 | 0 | 6A3CBDFF2D64D17E02773C645 |
| $CS100_{69}$ | 100 | 25 | 0 | 2BCD09889A1D7FC219F2EDE3B |
| $CS100_{70}$ | 100 | 25 | 0 | 3E49467F4D4280B9942CD6F8C |
| $CS100_{71}$ | 100 | 25 | 0 | 658E336DCFD9809F86D54A501 |
| $CS100_{72}$ | 100 | 25 | 0 | ED4284F345170CF77268C8584 |
| $CS100_{73}$ | 100 | 25 | 0 | 29ECCE910D832CAF15E3DF5D1 |
| $CS100_{74}$ | 100 | 25 | 0 | 456CCF7FE9353D50E87A708FA |
| $CS100_{75}$ | 100 | 25 | 0 | FB757CC9E18CBC02BF1B84B9A |
| $CS100_{76}$ | 100 | 25 | 0 | 5686229A8D98224BC426BC7FC |

| Code Identifier | Code Length | No. of Hexadec. Symbols | Number of Filled up Zeros | Code Sequence |
|---|---|---|---|---|
| $CS100_{77}$ | 100 | 25 | 0 | 700A2D325EA14C4B7B7AA8338 |
| $CS100_{78}$ | 100 | 25 | 0 | 1210A330B4D3B507D854CBA3F |
| $CS100_{79}$ | 100 | 25 | 0 | 438EE410BD2F7DBCDD85565BA |
| $CS100_{80}$ | 100 | 25 | 0 | 4B9764CC455AE1F61F7DA432B |
| $CS100_{81}$ | 100 | 25 | 0 | BF1F45FDDA3594ACF3C4CC806 |
| $CS100_{82}$ | 100 | 25 | 0 | DA425440FE8F6E2C11B8EC1A4 |
| $CS100_{83}$ | 100 | 25 | 0 | EE2C8057A7C16999AFA33FED1 |
| $CS100_{84}$ | 100 | 25 | 0 | 2C8BD7D8395C61DFA96243491 |
| $CS100_{85}$ | 100 | 25 | 0 | 391E4BB6BC43E98150CDDCADA |
| $CS100_{86}$ | 100 | 25 | 0 | 399F72A9EADB42C90C3ECF7F0 |
| $CS100_{87}$ | 100 | 25 | 0 | 93031FDEA588F88E83951270C |
| $CS100_{88}$ | 100 | 25 | 0 | BA8061462D873705E95D5CB37 |
| $CS100_{89}$ | 100 | 25 | 0 | D24188F88544EB121E963FD34 |
| $CS100_{90}$ | 100 | 25 | 0 | D5F6A8BB081D8F383825A4DCA |
| $CS100_{91}$ | 100 | 25 | 0 | 0FA4A205F0D76088D08EAF267 |
| $CS100_{92}$ | 100 | 25 | 0 | 272E909FAEBC65215E263E258 |
| $CS100_{93}$ | 100 | 25 | 0 | 3370F35A674922828465FC816 |
| $CS100_{94}$ | 100 | 25 | 0 | 54EF96116D4A0C8DB0E07101F |
| $CS100_{95}$ | 100 | 25 | 0 | DE347C7B27FADC48EF1826A2B |
| $CS100_{96}$ | 100 | 25 | 0 | 01B16ECA6FC343AE08C5B8944 |
| $CS100_{97}$ | 100 | 25 | 0 | 1854DB743500EE94D8FC768ED |
| $CS100_{98}$ | 100 | 25 | 0 | 28E40C684C87370CD0597FAB4 |
| $CS100_{99}$ | 100 | 25 | 0 | 5E42C19717093353BCAAF4033 |
| $CS100_{100}$ | 100 | 25 | 0 | 64310BAD8EB5B36E38646AF01 |

Table 21. Secondary Code Sequences (Part 2)

### 3.5.2. Secondary Codes Assignment

The assignment of the secondary codes of paragraph 3.5.1 to the signal components is according to Table 22. For the 4, 20 and 25 bit secondary codes the same code is used for all associated primary codes. For the 100 bit codes, an independent secondary code is assigned for each primary code.

| Component | Secondary Code Assignment |
|---|---|
| E5a-I | $CS20_1$ |
| E5a-Q | $CS100_{1\text{-}50}$ |
| E5b-I | $CS4_1$ |
| E5b-Q | $CS100_{51\text{-}100}$ |
| E6-B | N/A |

| Component | Secondary Code Assignment |
|---|---|
| E6-C | $CS100_{1-50}$ |
| E1-B | N/A |
| E1-C | $CS25_1$ |

Table 22. Secondary Code Assignment

## 3.6. Code Assignments to Satellites

### 3.6.1. Primary code assignment to satellites

The E5a-I, E5a-Q, E5b-I, E5b-Q primary codes (defined in Section 3.4.1) and E1-B, E1-C primary codes (defined in Annex C of the electronic version of this ICD) will be allocated to the space vehicle IDs (SVID) as follows:

- To SVID *n* (with *n* = 1 to 36) are assigned the corresponding E5a-I, E5a-Q, E5b-I, E5b-Q, E1-B and E1-C primary code number *n*.

### 3.6.2. Secondary code assignment to satellites

The E5a-I, E5a-Q, E5b-I, E5b-Q and E1-C secondary codes (defined in Section 3.5.1) are allocated to the space vehicle IDs (SVID) as follows:

- The following secondary codes are assigned according to SVID *n* (with *n* = 1 to 36):
  - secondary code $CS100_n$ for the signal component E5a-Q (i.e. $CS100_1$ to SVID 1)
  - secondary code $CS100_{(n+50)}$ for the signal component E5b-Q (i.e. $CS100_{51}$ to SVID 1)
- The following secondary codes are assigned to all SVIDs (1 to 36):
  - secondary code $CS20_1$ for the signal component E5a-I (same for all SVIDs)
  - secondary code $CS4_1$ for the signal component E5b-I (same for all SVIDs)
  - secondary code $CS25_1$ for the signal component E1-C (same for all SVIDs)

# 4. Galileo Message Structure

## 4.1. General Message Format Specification

### 4.1.1. General Navigation Message Content

The Galileo Signal-In-Space data channels transmit different message types according to the general contents identified in Table 23 below. The F/NAV types of message correspond to the OS and the I/NAV types of message correspond to both OS and CS.

| Message Type | Services | Component |
|---|---|---|
| F/NAV | OS | E5a-I |
| I/NAV | OS/CS | E5b-I and E1-B |
| C/NAV | CS | E6-B |

Table 23. Message Allocation and General Data Content

Note: The C/NAV message format is not the subject of this SIS ICD.

### 4.1.2. General Navigation Message Structure

The complete navigation message data are transmitted on each data component as a sequence of frames. A frame is composed of several sub-frames, and a sub-frame in turn is composed of several pages. The page is the basic structure for building the navigation message.

For all message types, only the message pages include a 'type' marker to identify the content of each page received by the user. There is no management data transmitted within the navigation message to indicate subframe and frame structures, and indeed these higher level structures should be considered as the typical flow of pages reflecting the current Galileo navigation message design, which may evolve together with future evolutions of Galileo. This evolution may also involve the inclusion of additional new page types beyond the types defined in this version of the Galileo OS SIS ICD. A user receiver is expected to be able to recognise page types and to react properly and in a well controlled manner to page types unknown to its software as well as to variations in the order of received pages.

### 4.1.3. Bit and Byte Ordering Criteria

All data values are encoded using the following bit and byte ordering criteria:

- For numbering, the most significant bit/byte is numbered as bit/byte 0
- For bit/byte ordering, the most significant bit/byte is transmitted first

### 4.1.4. FEC Coding and Interleaving Parameters

#### *4.1.4.1. FEC Encoding*

The convolutional encoding for all data pages on all signal components is performed according to the parameters given in Table 24.

| Code Parameter | Value |
|---|---|
| Coding Rate | ½ |
| Coding Scheme | Convolutional |
| Constraint Length | 7 |
| Generator Polynomials | $G1$=171o<br>$G2$=133o |
| Encoding Sequence | $G1$ then $G2$ |

Table 24. Data Coding Parameters

Figure 13 depicts this convolutional coding scheme. Decoding can be implemented using a standard Viterbi decoder.

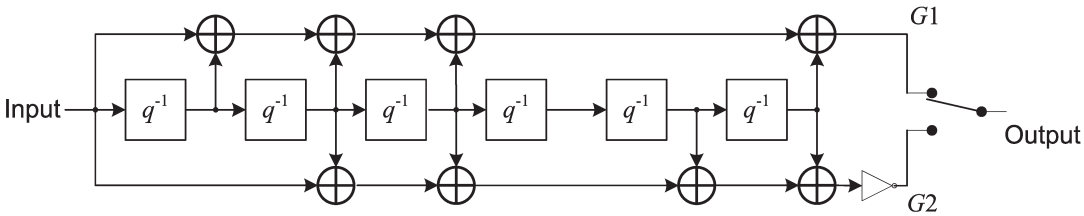


Figure 13. Convolutional Coding Scheme

Note: Figure 13 describes an encoder where the second branch is inverted at the end.

#### *4.1.4.2. Interleaving*

For each message type, the FEC encoded page is interleaved using a block interleaver with $n$ columns (where data is written) and $k$ rows (where data is read), as shown in Table 25.

| Parameters | Message Type | |
|---|---|---|
| | F/NAV | I/NAV |
| Block interleaver size (Symbols) | 488 | 240 |
| Block interleaver dimensions ($n$ columns x $k$ rows) | 61 x 8 | 30 x 8 |

Table 25. Interleaving Parameters

#### *4.1.4.3. FEC Coding and Interleaving Numerical Examples*

Numerical examples for the convolutional encoding described in Section 4.1.4.1 and for the subsequent interleaving described in Section 4.1.4.2 are provided in Annex D.

### 4.1.5. Frame and Page Timing

Time stamps are inserted in the navigation message at regular intervals by the broadcasting satellite to identify absolute Galileo System Time (GST). The exact timing of the page frame boundaries is used to identify fractional GST timing (less than one frame period). This is measured relative to the leading edge of the first chip of the first code sequence of the first page symbol of the page containing the TOW. The transmission timing of the navigation message provided through the TOW is synchronised to each satellite's version of GST.

### 4.1.6. Reserved and Spare Bits

Reserved and spare bits may be used for evolution, and defined in future updates of this ICD.

## 4.2. F/NAV Message Description

### 4.2.1. General Description of the F/NAV Message

The F/NAV message structure is presented in Figure 14, where the duration of each entity is indicated.

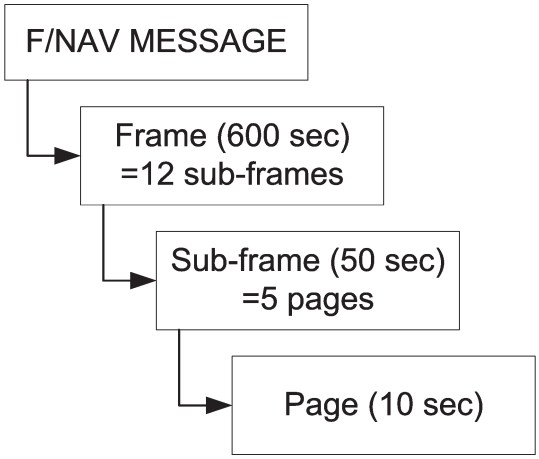


Figure 14. F/NAV Message Structure

### 4.2.2. F/NAV Page Layout

The page layout for the F/NAV message type is according to Table 26 where the symbols allocation and bits allocation are shown separately. The different fields composing this layout are defined in the sections below.

| Sync. | F/NAV Symbols | Total (symb) |
|---|---|---|
| 12 | 488 | 500 |

| F/NAV Word | | | Tail | Total (bits) |
|---|---|---|---|---|
| Page type | Navigation Data | CRC | | |
| 6 | 208 | 24 | 6 | 244 |

Table 26. F/NAV Page Layout

Note: Transmission of a page starts with the first bit of the synchronisation pattern.

#### *4.2.2.1. Synchronisation Pattern*

The synchronisation pattern allows the receiver to achieve synchronisation to the page boundary.

Note: The synchronisation pattern is not encoded. The F/NAV synchronisation pattern is 101101110000

#### *4.2.2.2. Tail Bits*

The tail bits field consists of 6 zero-value bits enabling completion of the FEC decoding of each page's information content in the user receiver.

#### *4.2.2.3. F/NAV Word*

The useful data are contained in the F/NAV word composed of

- A page type field (6 bits) enabling to identify the page content as defined in paragraph 4.2.4
- A navigation data field (208 bits) whose structure is presented in paragraph 4.2.4
- A CRC (24 bits) to detect potential bit errors, according to paragraph 5.1.9.4. The CRC is computed on the Page Type and Navigation Data fields.

### 4.2.3. F/NAV Frame Layout

The F/NAV E5a-I message data packet transmission sequence is according to Table 27 where a whole frame is shown. Note that the odd numbered sub-frames contain the page type 5 and the even numbered sub-frames contain the page type 6. This allows the transmission of the almanacs for three satellites within two successive sub-frames (100 seconds). The parameter k is transparent for the user. It is set by the Galileo system for each of the active satellites, such as to improve almanac transport time by exploiting source diversity.

| | Page Type | Page Content |
|---|---|---|
| **Subframe 1** | 1 | SVID, clock correction, SISA, Ionospheric correction, BGD, Signal health status, GST and Data validity status |
| | 2 | Ephemeris (1/3) and GST |
| | 3 | Ephemeris (2/3) and GST |
| | 4 | Ephemeris (3/3), GST-UTC conversion, GST-GPS Conversion and TOW |
| | 5 | Almanac for satellite k and almanac for satellite (k+1) part 1 |
| **Subframe 2** | 1 | SVID, clock correction, SISA, Ionospheric correction, BGD, Signal health status, GST and Data validity status |
| | 2 | Ephemeris (1/3) and GST |
| | 3 | Ephemeris (2/3) and GST |
| | 4 | Ephemeris (3/3), GST-UTC conversion, GST-GPS Conversion and TOW |
| | 6 | Almanac for satellite (k+1) part 2 and almanac for satellite (k+2) |
| **Subframe 3** | 1 | SVID, clock correction, SISA, Ionospheric correction, BGD, Signal health status, GST and Data validity status |
| | 2 | Ephemeris (1/3) and GST |
| | 3 | Ephemeris (2/3) and GST |
| | 4 | Ephemeris (3/3), GST-UTC conversion, GST-GPS Conversion and TOW |
| | 5 | Almanac for satellite (k+3) and almanac for satellite (k+4) part 1 |
| **Subframe 4** | 1 | SVID, clock correction, SISA, Ionospheric correction, BGD, Signal health status, GST and Data validity status |
| | 2 | Ephemeris (1/3) and GST |
| | 3 | Ephemeris (2/3) and GST |
| | 4 | Ephemeris (3/3), GST-UTC conversion, GST-GPS Conversion and TOW |
| | 6 | Almanac for satellite (k+4) part 2 and almanac for satellite (k+5) |
| **Subframe 5** | 1 | SVID, clock correction, SISA, Ionospheric correction, BGD, Signal health status, GST and Data validity status |
| | 2 | Ephemeris (1/3) and GST |
| | 3 | Ephemeris (2/3) and GST |
| | 4 | Ephemeris (3/3), GST-UTC conversion, GST-GPS Conversion and TOW |
| | 5 | Almanac for satellite (k+6) and almanac for satellite (k+7) part 1 |

| | Page Type | Page Content |
|---|---|---|
| Subframe 6 | 1 | SVID, clock correction, SISA, Ionospheric correction, BGD, Signal health status, GST and Data validity status |
| | 2 | Ephemeris (1/3) and GST |
| | 3 | Ephemeris (2/3) and GST |
| | 4 | Ephemeris (3/3), GST-UTC conversion, GST-GPS Conversion and TOW |
| | 6 | Almanac for satellite (k+7) part 2 and almanac for satellite (k+8) |
| Subframe 7 | 1 | SVID, clock correction, SISA, Ionospheric correction, BGD, Signal health status, GST and Data validity status |
| | 2 | Ephemeris (1/3) and GST |
| | 3 | Ephemeris (2/3) and GST |
| | 4 | Ephemeris (3/3), GST-UTC conversion, GST-GPS Conversion and TOW |
| | 5 | Almanac for satellite (k+9) and almanac for satellite (k+10) part 1 |
| Subframe 8 | 1 | SVID, clock correction, SISA, Ionospheric correction, BGD, Signal health status, GST and Data validity status |
| | 2 | Ephemeris (1/3) and GST |
| | 3 | Ephemeris (2/3) and GST |
| | 4 | Ephemeris (3/3), GST-UTC conversion, GST-GPS Conversion and TOW |
| | 6 | Almanac for satellite (k+10) part 2 and almanac for satellite (k+11) |
| Subframe 9 | 1 | SVID, clock correction, SISA, Ionospheric correction, BGD, Signal health status, GST and Data validity status |
| | 2 | Ephemeris (1/3) and GST |
| | 3 | Ephemeris (2/3) and GST |
| | 4 | Ephemeris (3/3), GST-UTC conversion, GST-GPS Conversion and TOW |
| | 5 | Almanac for satellite (k+12) and almanac for satellite (k+13) part 1 |
| Subframe 10 | 1 | SVID, clock correction, SISA, Ionospheric correction, BGD, Signal health status, GST and Data validity status |
| | 2 | Ephemeris (1/3) and GST |
| | 3 | Ephemeris (2/3) and GST |
| | 4 | Ephemeris (3/3), GST-UTC conversion, GST-GPS Conversion and TOW |
| | 6 | Almanac for satellite (k+13) part 2 and almanac for satellite (k+14) |
| Subframe 11 | 1 | SVID, clock correction, SISA, Ionospheric correction, BGD, Signal health status, GST and Data validity status |
| | 2 | Ephemeris (1/3) and GST |
| | 3 | Ephemeris (2/3) and GST |
| | 4 | Ephemeris (3/3), GST-UTC conversion, GST-GPS Conversion and TOW |
| | 5 | Almanac for satellite (k+15) and almanac for satellite (k+16) part 1 |

| | Page Type | Page Content |
|---|---|---|
| **Subframe 12** | 1 | SVID, clock correction, SISA, Ionospheric correction, BGD, Signal health status, GST and Data validity status |
| | 2 | Ephemeris (1/3) and GST |
| | 3 | Ephemeris (2/3) and GST |
| | 4 | Ephemeris (3/3), GST-UTC conversion, GST-GPS Conversion and TOW |
| | 6 | Almanac for satellite (k+16) part 2 and almanac for satellite (k+17) |

Table 27. F/NAV Frame Layout

### 4.2.4. F/NAV Page Contents

The following tables specify the contents of the F/NAV pages above allocated (see Chapter 5 for a description of the F/NAV pages contents).

Page Type 1: SVID, Clock correction, SISA, Ionospheric correction, BGD, GST, Signal health and Data validity status

| Type=1 | SVID | $IOD_{nav}$ | **Clock correction** | | | | SISA(E1,E5a) | **Ionospheric correction** | | | | | | | | $BGD(E1,E5a)$ | $E5a_{HS}$ | **GST** | | $E5a_{DVS}$ | Spare | CRC | Tail | **Total (bits)** |
|---|---|---|---|---|---|---|---|---|---|---|---|---|---|---|---|---|---|---|---|---|---|---|---|---|
| | | | | | | | | Az | | | Ionospheric disturbance flag | | | | | | | | | | | | | |
| | | | $t_{0c}$ | $a_{f0}$ | $a_{f1}$ | $a_{f2}$ | | $a_{i0}$ | $a_{i1}$ | $a_{i2}$ | Region 1 | Region 2 | Region 3 | Region 4 | Region 5 | | | $WN$ | $TOW$ | | | | | |
| 6 | 6 | 10 | 14 | 31 | 21 | 6 | 8 | 11 | 11 | 14 | 1 | 1 | 1 | 1 | 1 | 10 | 2 | 12 | 20 | 1 | 26 | 24 | 6 | 244 |

Table 28. Bits Allocation for F/NAV Page Type 1

Page Type 2: Ephemeris (1/3) and GST

| Type=2 | $IOD_{nav}$ | **Ephemeris (1/3)** | | | | | | **GST** | | CRC | Tail | **Total (bits)** |
|---|---|---|---|---|---|---|---|---|---|---|---|---|
| | | $M_0$ | $\bullet\Omega$ | e | $A^{1/2}$ | $\Omega_0$ | $\bullet i$ | $WN$ | $TOW$ | | | |
| 6 | 10 | 32 | 24 | 32 | 32 | 32 | 14 | 12 | 20 | 24 | 6 | 244 |

Table 29. Bits Allocation for F/NAV Page Type 2

Page Type 3: Ephemeris (2/3) and GST

| Type=3 | $IOD_{nav}$ | **Ephemeris (2/3)** | | | | | | | | **GST** | | Spare | CRC | Tail | **Total (bits)** |
|---|---|---|---|---|---|---|---|---|---|---|---|---|---|---|---|
| | | $i_0$ | $\omega$ | $\Delta n$ | $C_{uc}$ | $C_{us}$ | $C_{rc}$ | $C_{rs}$ | $t_{0e}$ | $WN$ | $TOW$ | | | | |
| 6 | 10 | 32 | 32 | 16 | 16 | 16 | 16 | 16 | 14 | 12 | 20 | 8 | 24 | 6 | 244 |

Table 30. Bits Allocation for F/NAV Page Type 3

Page Type 4: Ephemeris (3/3), GST-UTC conversion, GST-GPS conversion and TOW.

| Type=4 | $IOD_{nav}$ | **Ephemeris (3/3)** | | **GST-UTC Conversion** | | | | | | | | **GST-GPS Conversion** | | | | $TOW$ | Spare | CRC | Tail | **Total (bits)** |
|---|---|---|---|---|---|---|---|---|---|---|---|---|---|---|---|---|---|---|---|---|
| | | $C_{ic}$ | $C_{is}$ | $A_0$ | $A_1$ | $\Delta t_{LS}$ | $t_{0t}$ | $WN_{0t}$ | $WN_{LSF}$ | $DN$ | $\Delta t_{LSF}$ | $t_{0G}$ | $A_{0G}$ | $A_{1G}$ | $WN_{0G}$ | | | | | |
| 6 | 10 | 16 | 16 | 32 | 24 | 8 | 8 | 8 | 8 | 3 | 8 | 8 | 16 | 12 | 6 | 20 | 5 | 24 | 6 | 244 |

Table 31. Bits Allocation for F/NAV Page Type 4

Page Type 5: Almanac (SVID1 and SVID2(1/2)), Week Number and almanac reference time

| Type=5 | $IOD_a$ | $WN_a$ | $t_{0a}$ | **$SV_{SVID1}$** | | | | | | | | | | | **$SV_{SVID2}(1/2)$** | | | | | | CRC | Tail | **Total (bits)** |
|---|---|---|---|---|---|---|---|---|---|---|---|---|---|---|---|---|---|---|---|---|---|---|---|
| | | | | $SVID1$ | $\Delta(A^{1/2})$ | $e$ | $\omega$ | $\delta i$ | $\Omega_0$ | $\dot{\Omega}$ | $M_0$ | $a_{f0}$ | $a_{f1}$ | E5a$_{HS}$ | SVID2 | $\Delta(A^{1/2})$ | $e$ | $\omega$ | $\delta i$ | $\Omega_{0\,(1/2)}$ | | | |
| 6 | 4 | 2 | 10 | 6 | 13 | 11 | 16 | 11 | 16 | 11 | 16 | 16 | 13 | 2 | 6 | 13 | 11 | 16 | 11 | 4 | 24 | 6 | 244 |

Table 32. Bits Allocation for F/NAV Page Type 5

Page Type 6: Almanac (SVID2(2/2) and SVID3)

| Type=6 | $IOD_a$ | **$SV_{SVID2}(2/2)$** | | | | | | **$SV_{SVID3}$** | | | | | | | | | | | Spare | CRC | Tail | **Total (bits)** |
|---|---|---|---|---|---|---|---|---|---|---|---|---|---|---|---|---|---|---|---|---|---|---|
| | | $\Omega_{0\,(2/2)}$ | $\dot{\Omega}$ | $M_0$ | $a_{f0}$ | $a_{f1}$ | E5a$_{HS}$ | SVID3 | $\Delta(A^{1/2})$ | $e$ | $\omega$ | $\delta_i$ | $\Omega_0$ | $\dot{\Omega}$ | $M_0$ | $a_{f0}$ | $a_{f1}$ | E5a$_{HS}$ | | | | |
| 6 | 4 | 12 | 11 | 16 | 16 | 13 | 2 | 6 | 13 | 11 | 16 | 11 | 16 | 11 | 16 | 16 | 13 | 2 | 3 | 24 | 6 | 244 |

Table 33. Bits Allocation for F/NAV Page Type 6

### 4.2.5. F/NAV Dummy Page Definition

In case no valid F/NAV data is to be transmitted, the satellite generates and downlinks the dummy pages (Page Type 63) replacing the pages in the nominal sequencing, according to the format in Table 34. CRC is computed on the Page Type and Dummy sequence fields.

| Type=63 | Dummy sequence | CRC | Tail | **Total (bits)** |
|---|---|---|---|---|
| 6 | 208 | 24 | 6 | 244 |

Table 34. Bits Allocation for F/NAV Dummy Page

## *4.3. I/NAV Message Description*

### 4.3.1. General Description of the I/NAV Message

The I/NAV message structure is presented in Figure 15, where the duration of each entity is indicated.

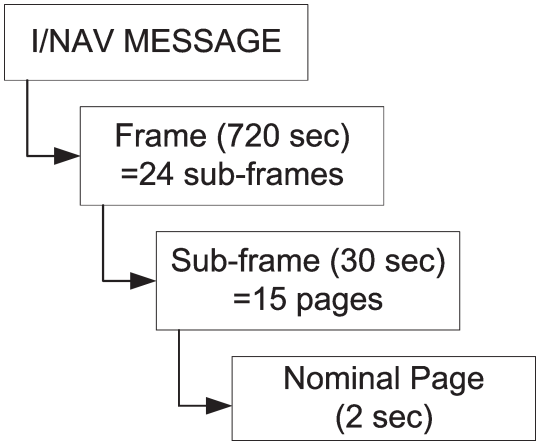


Figure 15. I/NAV Message Structure in the Nominal Mode

The I/NAV message structures for the E5b-I and E1-B signals use the same page layout since the service provided on these frequencies is a dual frequency service, using frequency diversity. Only page sequencing is different, with page swapping between both components in order to allow a fast reception of data by a dual frequency receiver. Nevertheless, the frame is designed to allow receivers to work also with a single frequency.

### 4.3.2. I/NAV Page Layout

Two types of I/NAV pages are defined:

- Nominal pages having a duration of 2 seconds transmitted sequentially in time in two parts of duration 1 second each on each of the E5b-I and E1-B components according to Table 36. The first part of a page is denoted 'even' and the second one is denoted 'odd'.
- Alert pages having a duration of 1 second transmitted in two parts of duration 1 second each at the same epoch over the E5b-I and E1-B components according to Table 37. Again, the first part of a page is denoted 'even' and the second one is denoted 'odd'. This transmission is repeated at the next epoch but switching the two parts between the components.

The I/NAV page part (even or odd) layout is defined in Table 35 for both nominal and alert page types. This table shows the symbols allocation and bits allocation separately. The different fields composing this layout are defined in the sections below.

| Sync. | I/NAV Page Part (even or odd) Symbols | Total (symb) |
|---|---|---|
| 10 | 240 | 250 |

| I/NAV Page Part (even or odd) Bits | Tail | Total (bits) |
|---|---|---|
| 114 | 6 | 120 |

Table 35. I/NAV Page Part Layout

Note: Transmission of a page starts with the first bit of the synchronisation pattern.

#### *4.3.2.1. Synchronisation Pattern*

The synchronisation pattern allows the receiver to achieve synchronisation to the page boundary.

Note: The synchronisation pattern is not encoded. The I/NAV synchronisation pattern is 0101100000

#### 4.3.2.2. *Tail Bits*

The tail bits field consists of 6 zero-value bits enabling completion of the FEC decoding of each page's information content in the user receiver.

#### 4.3.2.3. *I/NAV Page Part*

The structure of the nominal I/NAV even and odd page parts on E5b-I and E1-B are defined in Table 36. A nominal page is composed by the two page parts (even and odd) transmitted sequentially over the same frequency ("vertical page").

| **E5b-I** | | | | |
|---|---|---|---|---|
| Even/odd=0 | Page Type | Data i (1/2) | Tail | **Total (bits)** |
| 1 | 1 | 112 | 6 | 120 |
| Even/odd=1 | Page Type | Data i (2/2) | Reserved 1 | $CRC_i$ | Reserved 2 | Tail | **Total (bits)** |
| 1 | 1 | 16 | 64 | 24 | 8 | 6 | 120 |

| **E1-B** | | | | | | | | | |
|---|---|---|---|---|---|---|---|---|---|
| Even/odd=1 | Page Type | Data j (2/2) | Reserved 1 | SAR | Spare | $CRC_j$ | SSP | Tail | **Total (bits)** |
| 1 | 1 | 16 | 40 | 22 | 2 | 24 | 8 | 6 | 120 |
| Even/odd=0 | Page Type | Data k (1/2) | Tail | **Total (bits)** |
| 1 | 1 | 112 | 6 | 120 |

Table 36. I/NAV Nominal Page with Bits Allocation

The parameters for the nominal page have the following meaning and related values:

- Even/Odd field (1 bit) to indicate the part of the page (0=even/1=odd) that is broadcast
- Page Type (1 bit) equal to 0 to indicate the nominal page type
- Data field composed of a nominal word (described in 4.3.5) of 128 bits (comprising 112 bits of data (1/2) and 16 bits of data (2/2))
- SAR data (22 bits) composed of SAR RLM data on E1-B only as defined in 4.3.7
- CRC (24 bits) computed on the Even/Odd fields, Page Type fields, Data fields (1/2 and 2/2), Spare field, SAR (on E1-B only) and reserved fields (Reserved 1 for E5b-I and Reserved 1 for E1-B). In nominal mode the CRC is computed for the Even and Odd parts of a page of the same frequency ("vertical CRC") and is always broadcast on the second part of the "vertical page".

  Note: The Reserved 2 field on E5b-I and the SSP field on E1-B are not protected by the CRC.

- SSP (8 bits) containing one of the three secondary synchronisation pattern configurations as defined in 5.1.9.5
- Tail bits (2*6 bits) as defined in 4.3.2.2. These fields are not protected by the CRC.

The structure of the alert I/NAV even and odd page parts on E5b-I and E1-B are defined in Table 37. An alert page is composed by the two page parts (even and odd) transmitted at the same epoch over E5b-I and E1-B ("horizontal page").

| E5b-I | | | | | | |
|---|---|---|---|---|---|---|
| Even/odd=0 | Page Type | Reserved 1 (1/2) | | | Tail | **Total (bits)** |
| 1 | 1 | 112 | | | 6 | 120 |
| Even/odd=1 | Page Type | Reserved 1 (2/2) | CRC | Reserved 2 | Tail | **Total (bits)** |
| 1 | 1 | 80 | 24 | 8 | 6 | 120 |

| E1-B | | | | | | |
|---|---|---|---|---|---|---|
| Even/odd=1 | Page Type | Reserved 1 (2/2) | CRC | SSP | Tail | **Total (bits)** |
| 1 | 1 | 80 | 24 | 8 | 6 | 120 |
| Even/odd=0 | Page Type | Reserved 1 (1/2) | | | Tail | **Total (bits)** |
| 1 | 1 | 112 | | | 6 | 120 |

Table 37. I/NAV Alert Page with Bits Allocation

The parameters for the alert page have the following meaning and related values:

- Even/Odd field to indicate the part of the page (0=even/1=odd) that is broadcast
- Page Type (1 bit) equal to 1 to indicate the alert page type
- CRC (24 bits) computed on the Even/Odd fields, Page Type fields and on Reserved 1 (1/2 and 2/2). In alert mode the CRC is computed for the Even/ Odd pages of both frequencies E5b and E1-B ("horizontal CRC").
- The Reserved 1 and Reserved 2 fields will be published in a future update of this ICD. Note that the Reserved 2 field on E5b-I and the SSP field on E1-B are not protected by CRC.
- SSP (8 bits) containing one of the three secondary synchronisation pattern configurations as defined in 5.1.9.5.
- Tail bits (2*6 bits) as defined in 4.3.2.2.

### 4.3.3. I/NAV Nominal Sub-Frame Layout

In the nominal mode, the page sequence for I/NAV E5b-I and I/NAV E1-B components in every sub-frame is according to Table 38, where $T_0$ is synchronised with GST origin modulo 30 seconds.

| $T_0$ ($GST_0$ sync.) (s) | E5b-I Sub frame ID | E5b-I Page | E5b-I Content | | | | E1-B Content | | | | | | E1-B Page | E1-B Sub frame ID |
|---|---|---|---|---|---|---|---|---|---|---|---|---|---|---|
| 0 | N | Even | Word 1 (1/2) | | | | Word 16 (2/2) | Res | SAR | Spare | CRC | SSP3 | Odd | N-1 |
| 1 | N | Odd | Word 1 (2/2) | Res | CRC | Res | Word 2 (1/2) | | | | | | Even | N |
| 2 | N | Even | Word 3 (1/2) | | | | Word 2 (2/2) | Res | SAR | Spare | CRC | SSP1 | Odd | N |
| 3 | N | Odd | Word 3 (2/2) | Res | CRC | Res | Word 4 (1/2) | | | | | | Even | N |
| 4 | N | Even | Word 5 (1/2) | | | | Word 4 (2/2) | Res | SAR | Spare | CRC | SSP2 | Odd | N |
| 5 | N | Odd | Word 5 (2/2) | Res | CRC | Res | Word 6 (1/2) | | | | | | Even | N |

| $T_0$ ($GST_0$ sync.) (s) | E5b-I Sub frame ID | E5b-I Page | E5b-I Content | | | | E1-B Content | | | | | | E1-B Page | E1-B Sub frame ID |
|---|---|---|---|---|---|---|---|---|---|---|---|---|---|---|
| 6 | N | Even | Word 7 or 9 (1/2)* | | | | Word 6 (2/2) | Res | SAR | Spare | CRC | SSP3 | Odd | N |
| 7 | N | Odd | Word 7 or 9 (2/2)* | Res | CRC | Res | Word 7 or 9 (1/2)* | | | | | | Even | N |
| 8 | N | Even | Word 8 or 10 (1/2)* | | | | Word 7 or 9 (2/2)* | Res | SAR | Spare | CRC | SSP1 | Odd | N |
| 9 | N | Odd | Word 8 or 10 (2/2)* | Res | CRC | Res | Word 8 or 10 (1/2)* | | | | | | Even | N |
| 10 | N | Even | Word 0 (1/2) | | | | Word 8 or 10 (2/2)* | Res | SAR | Spare | CRC | SSP2 | Odd | N |
| 11 | N | Odd | Word 0 (2/2) | Res | CRC | Res | Word 17 or 18 (1/2)** | | | | | | Even | N |
| 12 | N | Even | Word 0 (1/2) | | | | Word 17 or 18 (2/2)** | Res | SAR | Spare | CRC | SSP3 | Odd | N |
| 13 | N | Odd | Word 0 (2/2) | Res | CRC | Res | Word 19 or 20 (1/2)** | | | | | | Even | N |
| 14 | N | Even | Word 0 (1/2) | | | | Word 19 or 20 (2/2)** | Res | SAR | Spare | CRC | SSP1 | Odd | N |
| 15 | N | Odd | Word 0 (2/2) | Res | CRC | Res | Word 16 (1/2) | | | | | | Even | N |
| 16 | N | Even | Word 0 (1/2) | | | | Word 16 (2/2) | Res | SAR | Spare | CRC | SSP2 | Odd | N |
| 17 | N | Odd | Word 0 (2/2) | Res | CRC | Res | Word 0 (1/2) | | | | | | Even | N |
| 18 | N | Even | Word 0 (1/2) | | | | Word 0 (2/2) | Res | SAR | Spare | CRC | SSP3 | Odd | N |
| 19 | N | Odd | Word 0 (2/2) | Res | CRC | Res | Word 0 (1/2) | | | | | | Even | N |
| 20 | N | Even | Word 2 (1/2) | | | | Word 0 (2/2) | Res | SAR | Spare | CRC | SSP1 | Odd | N |
| 21 | N | Odd | Word 2 (2/2) | Res | CRC | Res | Word 1 (1/2) | | | | | | Even | N |
| 22 | N | Even | Word 4 (1/2) | | | | Word 1 (2/2) | Res | SAR | Spare | CRC | SSP2 | Odd | N |
| 23 | N | Odd | Word 4 (2/2) | Res | CRC | Res | Word 3 (1/2) | | | | | | Even | N |
| 24 | N | Even | Word 6 (1/2) | | | | Word 3 (2/2) | Res | SAR | Spare | CRC | SSP3 | Odd | N |
| 25 | N | Odd | Word 6 (2/2) | Res | CRC | Res | Word 5 (1/2) | | | | | | Even | N |
| 26 | N | Even | Word 0 (1/2) | | | | Word 5 (2/2) | Res | SAR | Spare | CRC | SSP1 | Odd | N |
| 27 | N | Odd | Word 0 (2/2) | Res | CRC | Res | Word 0 (1/2) | | | | | | Even | N |
| 28 | N | Even | Word 0 (1/2) | | | | Word 0 (2/2) | Res | SAR | Spare | CRC | SSP2 | Odd | N |
| 29 | N | Odd | Word 0 (2/2) | Res | CRC | Res | Word 16 (1/2) | | | | | | Even | N |
| 30 | N+1 | Even | Word 1 (1/2) | | | | Word 16 (2/2) | Res | SAR | Spare | CRC | SSP3 | Odd | N |

Table 38. I/NAV Nominal Sub-Frame Structure

* The dissemination sequence of Word Types 7, 8, 9 and 10 within a frame is detailed in Table 39.

** FEC2 RS CED broadcast cycles through all four FEC2 RS CED Words.

The sub-frame structure shown in Table 38 is indicative: Deviations from the I/NAV word dissemination sequence as shown may appear, individually per satellite and precautions as per Section 4.1.2 are expected to be foreseen within the user receiver.

The indication of Word Type 0 in Table 38 reflects spare capacities in the I/NAV word dissemination sequence reserved for future use.

### 4.3.4. I/NAV Nominal Frame Layout

The I/NAV sub-frames containing almanac data are sequenced in a nominal frame according to Table 39.

| $T_0$ (s) | Sub-frame ID | E5b | E1B |
|---|---|---|---|
| 0 | 1 | Word 7: Almanac SV 1 (1/2) | Word 7: Almanac SV 19 (1/2) |
| | | Word 8: Almanac SV 1 (2/2) + almanac SV 2 (1/2) | Word 8: Almanac SV 19 (2/2) + almanac SV 20 (1/2) |
| 30 | 2 | Word 9: Almanac SV 2 (2/2) + almanac SV 3 (1/2) | Word 9: Almanac SV 20 (2/2) + almanac SV 21 (1/2) |
| | | Word 10: Almanac SV 3 (2/2) | Word 10: Almanac SV 21 (2/2) |
| 60 | 3 | Word 7: Almanac SV 4 (1/2) | Word 7: Almanac SV 22 (1/2) |
| | | Word 8: Almanac SV 4 (2/2) + almanac SV 5 (1/2) | Word 8: Almanac SV 22 (2/2) + almanac SV 23 (1/2) |
| 90 | 4 | Word 9: Almanac SV 5 (2/2) + almanac SV 6 (1/2) | Word 9: Almanac SV 23 (2/2) + almanac SV 24 (1/2) |
| | | Word 10: Almanac SV 6 (2/2) | Word 10: Almanac SV 24 (2/2) |
| 120 | 5 | Word 7: Almanac SV 7 (1/2) | Word 7: Almanac SV 25 (1/2) |
| | | Word 8: Almanac SV 7 (2/2) + almanac SV 8 (1/2) | Word 8: Almanac SV 25 (2/2) + almanac SV 26 (1/2) |
| 150 | 6 | Word 9: Almanac SV 8 (2/2) + almanac SV 9 (1/2) | Word 9: Almanac SV 26 (2/2) + almanac SV 27 (1/2) |
| | | Word 10: Almanac SV 9 (2/2) | Word 10: Almanac SV 27 (2/2) |
| 180 | 7 | Word 7: Almanac SV 10 (1/2) | Word 7: Almanac SV 28 (1/2) |
| | | Word 8: Almanac SV 10 (2/2) + almanac SV 11 (1/2) | Word 8: Almanac SV 28 (2/2) + almanac SV 29 (1/2) |
| 210 | 8 | Word 9: Almanac SV 11 (2/2) + almanac SV 12 (1/2) | Word 9: Almanac SV 29 (2/2) + almanac SV 30 (1/2) |
| | | Word 10: Almanac SV 12 (2/2) | Word 10: Almanac SV 30 (2/2) |
| 240 | 9 | Word 7: Almanac SV 13 (1/2) | Word 7: Almanac SV 31 (1/2) |
| | | Word 8: Almanac SV 13 (2/2) + almanac SV 14 (1/2) | Word 8: Almanac SV 31 (2/2) + almanac SV 32 (1/2) |
| 270 | 10 | Word 9: Almanac SV 14 (2/2) + almanac SV 15 (1/2) | Word 9: Almanac SV 32 (2/2) + almanac SV 33 (1/2) |
| | | Word 10: Almanac SV 15 (2/2) | Word 10: Almanac SV 33 (2/2) |
| 300 | 11 | Word 7: Almanac SV 16 (1/2) | Word 7: Almanac SV 34 (1/2) |
| | | Word 8: Almanac SV 16 (2/2) + almanac SV 17 (1/2) | Word 8: Almanac SV 34 (2/2) + almanac SV 35 (1/2) |
| 330 | 12 | Word 9: Almanac SV 17 (2/2) + almanac SV 18 (1/2) | Word 9: Almanac SV 35 (2/2) + almanac SV 36 (1/2) |
| | | Word 10: Almanac SV 18 (2/2) | Word 10: Almanac SV 36 (2/2) |
| 360 | 13 | Word 7: Almanac SV 19 (1/2) | Word 7: Almanac SV 1 (1/2) |
| | | Word 8: Almanac SV 19 (2/2) + almanac SV 20 (1/2) | Word 8: Almanac SV 1 (2/2) + almanac SV 2 (1/2) |
| 390 | 14 | Word 9: Almanac SV 20 (2/2) + almanac SV 21 (1/2) | Word 9: Almanac SV 2 (2/2) + almanac SV 3 (1/2) |
| | | Word 10: Almanac SV 21 (2/2) | Word 10: Almanac SV 3 (2/2) |

| $T_0$ (s) | Sub-frame ID | E5b | E1B |
|---|---|---|---|
| 420 | 15 | Word 7: Almanac SV 22 (1/2) | Word 7: Almanac SV 4 (1/2) |
| | | Word 8: Almanac SV 22 (2/2) + almanac SV 23 (1/2) | Word 8: Almanac SV 4 (2/2) + almanac SV 5 (1/2) |
| 450 | 16 | Word 9: Almanac SV 23 (2/2) + almanac SV 24 (1/2) | Word 9: Almanac SV 5 (2/2) + almanac SV 6 (1/2) |
| | | Word 10: Almanac SV 24 (2/2) | Word 10: Almanac SV 6 (2/2) |
| 480 | 17 | Word 7: Almanac SV 25 (1/2) | Word 7: Almanac SV 7 (1/2) |
| | | Word 8: Almanac SV 25 (2/2) + almanac SV 26 (1/2) | Word 8: Almanac SV 7 (2/2) + almanac SV 8 (1/2) |
| 510 | 18 | Word 9: Almanac SV 26 (2/2) + almanac SV 27 (1/2) | Word 9: Almanac SV 8 (2/2) + almanac SV 9 (1/2) |
| | | Word 10: Almanac SV 27 (2/2) | Word 10: Almanac SV 9 (2/2) |
| 540 | 19 | Word 7: Almanac SV 28 (1/2) | Word 7: Almanac SV 10 (1/2) |
| | | Word 8: Almanac SV 28 (2/2) + almanac SV 29 (1/2) | Word 8: Almanac SV 10 (2/2) + almanac SV 11 (1/2) |
| 570 | 20 | Word 9: Almanac SV 29 (2/2) + almanac SV 30 (1/2) | Word 9: Almanac SV 11 (2/2) + almanac SV 12 (1/2) |
| | | Word 10: Almanac SV 30 (2/2) | Word 10: Almanac SV 12 (2/2) |
| 600 | 21 | Word 7: Almanac SV 31 (1/2) | Word 7: Almanac SV 13 (1/2) |
| | | Word 8: Almanac SV 31 (2/2) + almanac SV 32 (1/2) | Word 8: Almanac SV 13 (2/2) + almanac SV 14 (1/2) |
| 630 | 22 | Word 9: Almanac SV 32 (2/2) + almanac SV 33 (1/2) | Word 9: Almanac SV 14 (2/2) + almanac SV 15 (1/2) |
| | | Word 10: Almanac SV 33 (2/2) | Word 10: Almanac SV 15 (2/2) |
| 660 | 23 | Word 7: Almanac SV 34 (1/2) | Word 7: Almanac SV 16 (1/2) |
| | | Word 8: Almanac SV 34 (2/2) + almanac SV 35 (1/2) | Word 8: Almanac SV 16 (2/2) + almanac SV 17 (1/2) |
| 690 | 24 | Word 9: Almanac SV 35 (2/2) + almanac SV 36 (1/2) | Word 9: Almanac SV 17 (2/2) + almanac SV 18 (1/2) |
| | | Word 10: Almanac SV 36 (2/2) | Word 10: Almanac SV 18 (2/2) |

Table 39. I/NAV Sub-Frame Sequencing

### 4.3.5. I/NAV Word Types

The content of the I/NAV word types is stated in the following tables (see Chapter 5 for a description of the I/NAV word types contents).

Word Type 1: Ephemeris (1/4)

| Type=1 | $IOD_{nav}$ | Ephemeris (1/4) | | | | Reserved | Total (bits) |
|---|---|---|---|---|---|---|---|
| | | $t_{0e}$ | $M_0$ | $e$ | $A^{1/2}$ | | |
| 6 | 10 | 14 | 32 | 32 | 32 | 2 | 128 |

Table 40. Bits Allocation for I/NAV Word Type 1

Word Type 2: Ephemeris (2/4)

| Type=2 | $IOD_{nav}$ | Ephemeris (2/4) | | | | Reserved | Total (bits) |
|---|---|---|---|---|---|---|---|
| | | $\Omega_0$ | $i_0$ | $\omega$ | $\dot{i}$ | | |
| 6 | 10 | 32 | 32 | 32 | 14 | 2 | 128 |

Table 41. Bits Allocation for I/NAV Word Type 2

Word Type 3: Ephemeris (3/4) and SISA

| Type=3 | $IOD_{nav}$ | Ephemeris (3/4) | | | | | | SISA(E1,E5b) | Total (bits) |
|---|---|---|---|---|---|---|---|---|---|
| | | $\dot{\Omega}$ | $\Delta n$ | $C_{UC}$ | $C_{US}$ | $C_{RC}$ | $C_{RS}$ | | |
| 6 | 10 | 24 | 16 | 16 | 16 | 16 | 16 | 8 | 128 |

Table 42. Bits Allocation for I/NAV Word Type 3

Word Type 4: SVID, Ephemeris (4/4), and Clock correction parameters

| Type=4 | $IOD_{nav}$ | SVID | Ephemeris (4/4) | | Clock correction | | | | Spare | Total (bits) |
|---|---|---|---|---|---|---|---|---|---|---|
| | | | $C_{ic}$ | $C_{is}$ | $t_{0c}$ | $a_{f0}$ | $a_{f1}$ | $a_{f2}$ | | |
| 6 | 10 | 6 | 16 | 16 | 14 | 31 | 21 | 6 | 2 | 128 |

Table 43. Bits Allocation for I/NAV Word Type 4

Word Type 5: Ionospheric correction, BGD, signal health and data validity status and GST

| Type=5 | Ionospheric correction | | | | | | | | $BGD(E1,E5a)$ | $BGD(E1,E5b)$ | $E5b_{HS}$ | $E1B_{HS}$ | $E5b_{DVS}$ | $E1B_{DVS}$ | GST | | Spare | Total (bits) |
|---|---|---|---|---|---|---|---|---|---|---|---|---|---|---|---|---|---|---|
| | Az | | | Ionospheric disturbance flag | | | | | | | | | | | | | | |
| | $a_{i0}$ | $a_{i1}$ | $a_{i2}$ | Region 1 | Region 2 | Region 3 | Region 4 | Region 5 | | | | | | | $WN$ | $TOW$ | | |
| 6 | 11 | 11 | 14 | 1 | 1 | 1 | 1 | 1 | 10 | 10 | 2 | 2 | 1 | 1 | 12 | 20 | 23 | 128 |

Table 44. Bits Allocation for I/NAV Word Type 5

Word Type 6: GST-UTC conversion parameters

| Type=6 | GST-UTC conversion parameters | | | | | | | | $TOW$ | Spare | Total (bits) |
|---|---|---|---|---|---|---|---|---|---|---|---|
| | $A_0$ | $A_1$ | $\Delta t_{LS}$ | $t_{ot}$ | $WN_{0t}$ | $WN_{LSF}$ | $DN$ | $\Delta t_{LSF}$ | | | |
| 6 | 32 | 24 | 8 | 8 | 8 | 8 | 3 | 8 | 20 | 3 | 128 |

Table 45. Bits Allocation for I/NAV Word Type 6

Word Type 7: Almanac for SVID1 (1/2), almanac reference time and almanac reference week number

| Type=7 | $IOD_a$ | $WN_a$ | $t_{0a}$ | $SV_{SVID1}$ (1/2) | | | | | | | | Reserved | Total (bits) |
|---|---|---|---|---|---|---|---|---|---|---|---|---|---|
| | | | | SVID1 | $\Delta(A^{1/2})$ | $e$ | $\omega$ | $\delta_i$ | $\Omega_0$ | $\dot{\Omega}$ | $M_0$ | | |
| 6 | 4 | 2 | 10 | 6 | 13 | 11 | 16 | 11 | 16 | 11 | 16 | 6 | 128 |

Table 46. Bits Allocation for I/NAV Word Type 7

Word Type 8: Almanac for SVID1 (2/2) and SVID2 (1/2))

| Type=8 | $IOD_a$ | $SV_{SVID1}$(2/2) | | | | $SV_{SVID2}$(1/2) | | | | | | | Spare | Total (bits) |
|---|---|---|---|---|---|---|---|---|---|---|---|---|---|---|
| | | $a_{f0}$ | $a_{f1}$ | $E5b_{HS}$ | $E1B_{HS}$ | SVID2 | $\Delta(A^{1/2})$ | $e$ | $\omega$ | $\delta_i$ | $\Omega_0$ | $\dot{\Omega}$ | | |
| 6 | 4 | 16 | 13 | 2 | 2 | 6 | 13 | 11 | 16 | 11 | 16 | 11 | 1 | 128 |

Table 47. Bits Allocation for I/NAV Word Type 8

Word Type 9: Almanac for SVID2 (2/2) and SVID3 (1/2))

| Type=9 | $IOD_a$ | $WN_a$ | $t_{0a}$ | $SV_{SVID2}$(2/2) | | | | | $SV_{SVID3}$(1/2) | | | | | Total (bits) |
|---|---|---|---|---|---|---|---|---|---|---|---|---|---|---|
| | | | | $M_0$ | $a_{f0}$ | $a_{f1}$ | $E5b_{HS}$ | $E1B_{HS}$ | SVID3 | $\Delta(A^{1/2})$ | $e$ | $\omega$ | $\delta_i$ | |
| 6 | 4 | 2 | 10 | 16 | 16 | 13 | 2 | 2 | 6 | 13 | 11 | 16 | 11 | 128 |

Table 48. Bits Allocation for I/NAV Word Type 9

Word Type 10: Almanac for SVID3 (2/2) and GST-GPS conversion parameters

| Type=10 | $IOD_a$ | $SV_{SVID3}$(2/2) | | | | | | | GST-GPS conversion parameters | | | | Total (bits) |
|---|---|---|---|---|---|---|---|---|---|---|---|---|---|
| | | $\Omega_0$ | $\dot{\Omega}$ | $M_0$ | $a_{f0}$ | $a_{f1}$ | $E5b_{HS}$ | $E1B_{HS}$ | $A_{0G}$ | $A_{1G}$ | $t_{0G}$ | $WN_{0G}$ | |
| 6 | 4 | 16 | 11 | 16 | 16 | 13 | 2 | 2 | 16 | 12 | 8 | 6 | 128 |

Table 49. Bits Allocation for I/NAV Word Type 10

Word Type 16: Reduced Clock and Ephemeris Data (CED) parameters

| Type=16 | Reduced CED parameters | | | | | | | | Total (bits) |
|---|---|---|---|---|---|---|---|---|---|
| | $\Delta A_{red}$ | $e_{xred}$ | $e_{yred}$ | $\Delta i_{0red}$ | $\Omega_{0red}$ | $\lambda_{0red}$ | $a_{f0red}$ | $a_{f1red}$ | |
| 6 | 5 | 13 | 13 | 17 | 23 | 23 | 22 | 6 | 128 |

Table 50. Bits Allocation for I/NAV Word Type 16

Word types 17, 18, 19, 20: FEC2 Reed-Solomon for Clock and Ephemeris Data (CED)

| Type= 17, 18, 19, 20 | FEC2 Reed-Solomon for CED (1/2) | $LSB(IOD_{nav})$ | FEC2 Reed-Solomon for CED (2/2) | Total (bits) |
|---|---|---|---|---|
| 6 | 8 | 2 | 112 | 128 |

Table 51. Bits Allocation for I/NAV Word Types 17, 18, 19, and 20

FEC2 Reed-Solomon (RS) words consist of 15 RS parity octets that can be used

- to recover missing RS octets from the RS information vector
- and/or to correct errors contained in received octets of the RS information vector.

The RS information and parity vectors are described in section 5.1.13.

Word Type 0: I/NAV Spare Word

| Type=0 | Time | Spare | GST | | Total (bits) |
|---|---|---|---|---|---|
| | | | *WN* | *TOW* | |
| 6 | 2 | 88 | 12 | 20 | 128 |

Table 52. Bits Allocation for Spare Word

When the field 'Time' is not set to '10', the fields *WN* and *TOW* do not contain valid data.

### 4.3.6. I/NAV Dummy Message Layout

In case no valid I/NAV data is to be transmitted, the satellite generates and downlinks the dummy message on E5b-I and E1-B components replacing the pages in the nominal sequencing, according to the Dummy pages layout defined in Table 53.

| E5b-I | | | | | E1-B | | | | | | |
|---|---|---|---|---|---|---|---|---|---|---|---|
| Even/odd=0 | Page Type | Dummy data (1/2) | | Tail | Total (bits) | Even/odd=1 | Page Type | Dummy data (2/2) | CRC | Spare | Tail | Total (bits) |
| 1 | 1 | 112 | | 6 | 120 | 1 | 1 | 80 | 24 | 8 | 6 | 120 |
| Even/odd=1 | Page Type | Dummy data (2/2) | CRC | Spare | Tail | Total (bits) | Even/odd=0 | Page Type | Dummy data (1/2) | | Tail | Total (bits) |
| 1 | 1 | 80 | 24 | 8 | 6 | 120 | 1 | 1 | 112 | | 6 | 120 |

Table 53. I/NAV Dummy Page with Bits Allocation

The parameters for the dummy page have the following meaning and related values:

- Even/Odd (1 bit) to indicate the part of the page (0=even/1=odd) that is broadcast
- Page Type (1 bit) equal to 0 to indicate the nominal page type
- Dummy Data (192 bits = 80 bits + 112 bits)
- CRC (24 bits): computed on the Even/odd fields, Type fields and Dummy data fields (1/2 and 2/2) for the Even/Odd page of the same frequency ("vertical CRC"), and the CRC is always broadcast on the second part of the "vertical page"
- Spare (8 bits). This field is not protected by the CRC
- Tail bits (2*6 bits) as defined in 4.3.2.2. These fields are not protected by the CRC

The dummy data word is formatted according to Table 54, with

- Word Type (6 bits) to indicate the word type dummy message, which is defined as type 63
- The dummy sequence (186 bits) is an arbitrary sequence

| Type = 63 | Dummy Sequence | | Total (bits) |
|---|---|---|---|
| 6 | 186 | | 192 |
| Dummy Data (1/2) (112 bits) | | Dummy Data (2/2) (80 bits) | |

Table 54. Dummy Word with Bits Allocation

### 4.3.7. SAR Field Structure

In the nominal mode the SAR RLM is transmitted only in the E1-B component. The SAR field structure for the E1-B component in nominal mode is formatted according to the values stated in Table 55. When an alert is present, the SAR data will not be transmitted

| SAR Data | | | Total (bits) |
|---|---|---|---|
| Start Bit | Short/Long RLM Identifier | SAR RLM Data | |
| 1 | 1 | 20 | 22 |

Table 55. SAR Field Bit Structure

The RLM identifier bit is described in the following table.

| RLM Identifier Value | Description |
|---|---|
| 0 | Short RLM |
| 1 | Long RLM |

Table 56. RLM Identifier Description

**SAR data in Nominal Mode**

In nominal mode, 22 bits are allocated to SAR data in one E1-B I/NAV page. The SAR messages are formatted according to the values and structure stated in Table 57 and Table 58 respectively for the short RLM and the long RLM. This structure allows the downlink of a short RLM within 8 seconds and of a long RLM within 16 seconds. The content of the SAR data is provided in paragraph 5.2.

- Short RLM

| Part (1/4) | | | Part (2/4) | | | Part (3/4) | | | Part (4/4) | | | |
|---|---|---|---|---|---|---|---|---|---|---|---|---|
| Start bit = 1 | Short RLM | SAR RLM data | Start bit = 0 | Short RLM | SAR RLM data | Start bit = 0 | Short RLM | SAR RLM data | Start bit = 0 | Short RLM | SAR RLM data | |
| | | Beacon ID (1/3) | | | Beacon ID (2/3) | | | Beacon ID (3/3) | | | Message code | Parameters |
| 1 | 1 | 20 | 1 | 1 | 20 | 1 | 1 | 20 | 1 | 1 | 4 | 16 |
| 22 | | | 22 | | | 22 | | | 22 | | | |

Table 57. SAR Short RLM

- Long RLM

| Part (1/8) | | | Part (2/8) | | | Part (3/8) | | | Part (4/8) | | | |
|---|---|---|---|---|---|---|---|---|---|---|---|---|
| Start bit = 1 | Long RLM | SAR RLM data<br>Beacon ID (1/3) | Start bit = 0 | Long RLM | SAR RLM data<br>Beacon ID (2/3) | Start bit = 0 | Long RLM | SAR RLM data<br>Beacon ID (3/3) | Start bit = 0 | Long RLM | SAR RLM data<br>Message code | Parameters (1/5) |
| 1 | 1 | 20 | 1 | 1 | 20 | 1 | 1 | 20 | 1 | 1 | 4 | 16 |
| 22 | | | 22 | | | 22 | | | 22 | | | |

| Part (5/8) | | | Part (6/8) | | | Part (7/8) | | | Part (8/8) | | |
|---|---|---|---|---|---|---|---|---|---|---|---|
| Start bit = 0 | Long RLM | SAR RLM data<br>Parameters (2/5) | Start bit = 0 | Long RLM | SAR RLM data<br>Parameters (3/5) | Start bit = 0 | Long RLM | SAR RLM data<br>Parameters (4/5) | Start bit = 0 | Long RLM | SAR RLM data<br>Parameters (5/5) |
| 1 | 1 | 20 | 1 | 1 | 20 | 1 | 1 | 20 | 1 | 1 | 20 |
| 22 | | | 22 | | | 22 | | | 22 | | |

Table 58. SAR Long RLM

### Spare SAR Data

In case no valid SAR data is to be transmitted, the satellite generates the spare SAR data field according to Table 59.

| SAR Data | | Total (bits) |
|---|---|---|
| Start Bit = 1 | Spare | |
| 1 | 21 | 22 |

Table 59. Spare SAR Data

A SAR receiver will use the sequence of start bits (and only these) to identify SAR data parts belonging to SAR RLMs. If the start bit of the current data part is equal to zero, then the data part contains SAR relevant data. If the start bit of the current data part is equal to one, the data part contains SAR relevant data only if the start bit of the next (immediately subsequent) data part is equal to zero.

# 5. Message Data Contents

This section describes the data items above mentioned. Semantics, formats and other characteristics are provided for all items to be transmitted inside frames.

## 5.1. Navigation Data

The navigation data contain all the parameters required for the user to compute a complete position, velocity and time (PVT) solution. They are stored on board each satellite with a validity duration and broadcast world-wide by all the satellites of the Galileo constellation. The 4 types of data needed to perform positioning are:

- Ephemeris parameters, which are needed to indicate the position of the satellite to the user receiver
- Time and clock correction parameters which are needed to compute pseudo-range
- Service parameters which are needed to identify the set of navigation data, satellites, and indicators of the signal health
- Almanac parameters, which are needed to indicate the position of all the satellites in the constellation with a reduced accuracy

### 5.1.1. Ephemeris

The ephemeris for each Galileo satellite is composed of 16 parameters, which are:

- 6 Keplerian parameters
- 6 harmonic coefficients
- 1 orbit inclination rate parameter
- 1 RAAN rate parameter
- 1 mean motion correction parameter, and
- 1 reference time parameter $t_{0e}$ for the ephemeris data set

The ephemeris for each Galileo satellite is according to the characteristics stated in Table 60.

| Parameter | Definition | Bits | Scale factor | Unit |
|---|---|---|---|---|
| $M_0$ | Mean anomaly at reference time | 32* | $2^{-31}$ | semi-circles** |
| $\Delta n$ | Mean motion difference from computed value | 16* | $2^{-43}$ | semi-circles/s** |
| $e$ | Eccentricity | 32 | $2^{-33}$ | N/A |
| $A^{1/2}$ | Square root of the semi-major axis | 32 | $2^{-19}$ | meter$^{1/2}$ |
| $\Omega_0$ | Longitude of ascending node of orbital plane at weekly epoch*** | 32* | $2^{-31}$ | semi-circles** |
| $i_0$ | Inclination angle at reference time | 32* | $2^{-31}$ | semi-circles** |
| $\omega$ | Argument of perigee | 32* | $2^{-31}$ | semi-circles** |

| Parameter | Definition | Bits | Scale factor | Unit |
|---|---|---|---|---|
| $\dot{\Omega}$ | Rate of change of right ascension | 24* | $2^{-43}$ | semi-circles/s** |
| $\dot{i}$ | Rate of change of inclination angle | 14* | $2^{-43}$ | semi-circles/s** |
| $C_{uc}$ | Amplitude of the cosine harmonic correction term to the argument of latitude | 16* | $2^{-29}$ | radians |
| $C_{us}$ | Amplitude of the sine harmonic correction term to the argument of latitude | 16* | $2^{-29}$ | radians |
| $C_{rc}$ | Amplitude of the cosine harmonic correction term to the orbit radius | 16* | $2^{-5}$ | meters |
| $C_{rs}$ | Amplitude of the sine harmonic correction term to the orbit radius | 16* | $2^{-5}$ | meters |
| $C_{ic}$ | Amplitude of the cosine harmonic correction term to the angle of inclination | 16* | $2^{-29}$ | radians |
| $C_{is}$ | Amplitude of the sine harmonic correction term to the angle of inclination | 16* | $2^{-29}$ | radians |
| $t_{0e}$ | Ephemeris reference time | 14 | 60 | seconds |
| **Total Ephemeris Size** | | **356** | | |

Table 60. Ephemeris Parameters

* Parameters so indicated are two's complement, with the sign bit (+ or -) occupying the MSB.

** Note that the 'semi-circle' is not a SI unit but can be converted as: 1 semi-circle = $\pi$ rad.

*** More precisely, $\Omega_0$ is the longitude of ascending node of orbital plane at the weekly epoch propagated to the reference time $t_{0e}$ at the rate of change of right ascension.

A single ephemeris is applicable to all signals of a specific satellite. The ephemeris is computed with respect to the apparent CoP common to every frequency.

The user can compute the ECEF coordinates of the SV's antenna phase centre position at GST time t utilising the equations shown in Table 61.

| Constant | Description |
|---|---|
| $\pi$ = 3.1415926535898 | Ratio of a circle's circumference to its diameter |
| $\mu$ = 3.986004418 × $10^{14}$ $m^3/s^2$ | Geocentric gravitational constant |
| $\omega_E$ = 7.2921151467 × $10^{-5}$ rad/s | Mean angular velocity of the Earth |
| $c$ = 299792458 m/s | Speed of light |

| Computation | Description |
|---|---|
| $A=(A^{1/2})^2$ | Semi-major axis |
| $n_0 = \sqrt{\frac{\mu}{A^3}}$ | Computed mean motion (rad/s) |
| $t_k = t - t_{0e}$* | Time from ephemeris reference epoch |
| $n = n_0 + \Delta n$ | Corrected mean motion |
| $M = M_0 + nt_k$ | Mean anomaly |
| $M = E - e \sin(E)$ | Kepler's Equation for Eccentric Anomaly $E$ (may be solved by iteration) |

| Computation | Description |
|---|---|
| $\nu = \tan^{-1}\left\{\frac{\sin\nu}{\cos\nu}\right\}$ <br> $= \tan^{-1}\left\{\frac{\sqrt{1-e^2}\,\sin E/(1-e\cos E)}{(\cos E - e)/(1-e\cos E)}\right\}$ | True Anomaly |
| $\Phi = \nu + \omega$ | Argument of Latitude |
| $\delta u = C_{us}\sin 2\Phi + C_{uc}\cos 2\Phi$ | Argument of Latitude Correction |
| $\delta r = C_{rs}\sin 2\Phi + C_{rc}\cos 2\Phi$ | Radius Correction |
| $\delta i = C_{is}\sin 2\Phi + C_{ic}\cos 2\Phi$ | Inclination Correction |
| $u = \Phi + \delta u$ | Corrected Argument of Latitude |
| $r = A(1-e\cos E) + \delta r$ | Corrected Radius |
| $i = i_0 + \delta i + [\dot{i}]t_k$ | Corrected Inclination |
| $\left.\begin{array}{l} x' = r\cos u \\ y' = r\sin u \end{array}\right\}$ | Position in orbital plane |
| $\Omega = \Omega_0 + [\dot{\Omega} - \omega_E]t_k - \omega_E t_{0e}$ | Corrected longitude of ascending node |
| $\left.\begin{array}{l} x = x'\cos(\Omega) - y'\cos(i)\sin(\Omega) \\ y = x'\sin(\Omega) + y'\cos(i)\cos(\Omega) \\ z = y'\sin(i) \end{array}\right\}$ | GTRF coordinates of the SV antenna phase center position at time t |

Table 61. User Algorithm for Ephemeris Determination

* $t$ is Galileo System Time (see e.g. paragraph 5.1.2). Furthermore, $t_k$ is the actual total time difference between the time $t$ and the epoch time $t_{0e}$ ($t_{0a}$ for the almanacs) and it accounts for beginning or end of week crossovers.

### 5.1.2. Galileo System Time (GST)

The GST is given as 32-bit binary number composed of two parameters as follows:

- The Week Number is an integer counter that gives the sequential week number from the GST start epoch. This parameter is represented with 12 bits, which covers 4096 weeks (about 78 years). Then the counter is reset to zero to cover an additional period modulo 4096.
- The Time of Week is defined as the number of seconds that have occurred since the transition from the previous week. The $TOW$ covers an entire week from 0 to 604799 seconds and is reset to zero at the end of each week.

The GST parameters are transmitted according to the characteristics stated in Table 62.

| Parameter | Definition | Bits | Scale factor | Unit |
|---|---|---|---|---|
| $WN$ | Week Number | 12 | 1 | week |
| $TOW$ | Time of Week | 20 | 1 | s |
| **Total Galileo System Time Size** | | **32** | | |

Table 62. GST Parameters

The GST start epoch is defined as 13 seconds before midnight between 21st August and 22nd August 1999, i.e. GST was equal to 13 seconds at 22nd August 1999 00:00:00 UTC.

As GST is a continuous time scale, and UTC is corrected periodically with an integer number of leap seconds, the Galileo navigation message contains all necessary parameters to convert between GST and UTC.

The epoch denoted in the navigation messages by $TOW$ and $WN$ will be measured relative to the leading edge of the first chip of the first code sequence of the first page symbol. The transmission timing of the navigation message provided through the $TOW$ is synchronised to each satellite's version of Galileo System Time (GST).

### 5.1.3. Clock Correction Parameters

The clock correction parameters are transmitted according to the values stated in Table 63.

| Parameter | Definition | Bits | Scale factor | Unit |
|---|---|---|---|---|
| $t_{0c}$ | Clock correction data reference Time of Week | 14 | 60 | s |
| $a_{f0}$ | SV clock bias correction coefficient | 31* | $2^{-34}$ | s |
| $a_{f1}$ | SV clock drift correction coefficient | 21* | $2^{-46}$ | s/s |
| $a_{f2}$ | SV clock drift rate correction coefficient | 6* | $2^{-59}$ | $s/s^2$ |
| **Total Clock Correction Size** | | **72** | | |

Table 63. Galileo Clock Correction Parameters

* Parameters so indicated are two's complement, with the sign bit (+ or -) occupying the MSB.

Each Galileo satellite broadcasts its own clock correction data for all signals through the relevant signal, according to Table 64.

| Message Type | Clock Model X=(f1,f2) | Satellite Time Correction Model Parameters | Services |
|---|---|---|---|
| F/Nav | (E1,E5a) | $a_{f0}$ (E1,E5a)<br>$a_{f1}$ (E1,E5a)<br>$a_{f2}$ (E1,E5a)<br>$t_{0C}$ (E1,E5a) | Dual-Frequency (E1,E5a)<br>Single-frequency E5a |
| I/NAV | (E1,E5b) | $a_{f0}$ (E1,E5b)<br>$a_{f1}$ (E1,E5b)<br>$a_{f2}$ (E1,E5b)<br>$t_{0C}$ (E1,E5b) | Dual-Frequency (E1,E5b)<br>Single-frequency E5b<br>Single-frequency E1 |

Table 64. Galileo Clock Correction Data

### 5.1.4. Satellite Time Correction Algorithm

Each satellite transmits time correction data. The predicted offset of the physical satellite signal TOT relative to the satellite signal TOT in GST can be computed for the dual frequency signal combination using the following formula:

$$TOT_c(X) = TOT_m(X) - \Delta t_{SV}(X) \qquad \text{Eq. 12}$$

where

- $(X)=(f_1,f_2)$ is the dual frequency combination $f_1$ and $f_2$ used for the clock model
- $TOT_C(X)$ is the corrected satellite TOT in GST for the signal combination $X$
- $TOT_m(X)$ is the physical satellite TOT for the signal combination $X$ retrieved through pseudo-range measurements
- $\Delta t_{SV}(X)$ is the satellite time correction for the signal combination $X$ computed by means of the time correction data retrieved from the navigation message

This satellite time correction (in seconds) is modelled through the following second order polynomial:

$$\Delta t_{SV}(X) = a_{f0}(X) + a_{f1}(X)[t - t_{0C}(X)] + a_{f2}(X)[t - t_{0C}(X)]^2 + \Delta t_r \qquad \text{Eq. 13}$$

where

- $a_{f0}(X)$, $a_{f1}(X)$, and $a_{f2}(X)$ are defined in 5.1.3
- $t_{0c}(X)$ is the reference time for the clock correction as defined in 5.1.3
- $t$ is the GST time in seconds
- $\Delta t_r$, expressed in seconds, is a relativistic correction term, given by

$$\Delta t_r = F\, e\, A^{1/2} \sin(E)$$

with the orbital parameters ($e$, $A^{1/2}$, $E$) as described in paragraph 5.1.1 and

$$F = -2\mu^{1/2}/c^2 = -4.442807309 \times 10^{-10}\ \mathrm{s/m^{1/2}}$$

### 5.1.5. Broadcast Group Delay

The Broadcast Group Delay $BGD(f_1,f_2)$ broadcast through the Galileo navigation message is defined as follows:

$$BGD(f_1, f_2) = \frac{TR_1 - TR_2}{1 - \left(\frac{f_1}{f_2}\right)^2} \qquad \text{Eq. 14}$$

where

- $f_1$ and $f_2$ denote the carrier frequencies of two Galileo signals
- $TR_1$ and $TR_2$ are the group delays of the signals whose carrier frequencies are respectively $f_1$ and $f_2$.

A single frequency user receiver processing pseudo-ranges from the frequency $f_1$ applies the following correction to the SV clock correction $\Delta t_{SV}$ which is defined in paragraph 5.1.4

$$\Delta t_{SV}(f_1) = \Delta t_{SV}(f_1, f_2) - BGD(f_1, f_2) \qquad \text{Eq. 15}$$

A single frequency user receiver processing pseudo-ranges from the frequency $f2$ applies the following correction to the SV clock correction $\Delta t_{SV}$ which is defined in paragraph 5.1.4

$$\Delta t_{SV}(f_2) = \Delta t_{SV}(f_1, f_2) - \left(\frac{f_1}{f_2}\right)^2 BGD(f_1, f_2) \qquad \text{Eq. 16}$$

A dual frequency user receiver processing pseudo-ranges from the two frequencies $f_1$ and $f_2$ does not apply any additional correction for group delay. The Broadcast Group Delay is coded according to the values stated in Table 65.

| Parameter | Definition | Bits | Scale factor | Unit |
|---|---|---|---|---|
| $BGD(E1,E5a)$ | E1-E5a Broadcast Group Delay | 10* | $2^{-32}$ | s |
| $BGD(E1,E5b)$ | E1-E5b Broadcast Group Delay | 10* | $2^{-32}$ | s |

Table 65. BGD Parameters

* Parameters so indicated are two's complement, with the sign bit (+ or -) occupying the MSB.

Each Galileo satellite broadcasts its own BGD data for all signals, through the relevant signal according to Table 66.

| Message Type | Type of Satellite Clocks | BGD($f_1$,$f_2$) | Services |
|---|---|---|---|
| F/NAV | (E1,E5a) | *BGD(E1,E5a)* | Single-frequency E5a |
| I/NAV | (E1,E5b) | *BGD(E1,E5b)* | Single-frequency E1<br>Single-frequency E5b |

Table 66. BGD Values Mapping on Messages and Services

### 5.1.6. Ionospheric Correction

The ionospheric model parameters provided in Table 67 are foreseen to be used with the ionospheric correction algorithm described in RD1.

The ionospheric model parameters include:

- the broadcast coefficients $a_{i0}$, $a_{i1}$ and $a_{i2}$ used to compute the Effective Ionisation Level $Az$
- the "Ionospheric Disturbance Flag" (also referred as "storm flag"), given for five different regions

These parameters are transmitted according to the characteristics stated in Table 67.

| Parameter | Definition | Bits | Scale factor | Unit |
|---|---|---|---|---|
| $a_{i0}$ | Effective Ionisation Level 1st order parameter | 11 | $2^{-2}$ | sfu** |
| $a_{i1}$ | Effective Ionisation Level 2nd order parameter | 11* | $2^{-8}$ | sfu**/degree |
| $a_{i2}$ | Effective Ionisation Level 3rd order parameter | 14* | $2^{-15}$ | sfu**/degree$^2$ |
| $SF_1$ | Ionospheric Disturbance Flag for region 1 | 1 | N/A | dimensionless |
| $SF_2$ | Ionospheric Disturbance Flag for region 2 | 1 | N/A | dimensionless |
| $SF_3$ | Ionospheric Disturbance Flag for region 3 | 1 | N/A | dimensionless |
| $SF_4$ | Ionospheric Disturbance Flag for region 4 | 1 | N/A | dimensionless |
| $SF_5$ | Ionospheric Disturbance Flag for region 5 | 1 | N/A | dimensionless |
| **Total Ionosphere Correction Size** | | **41** | | |

Table 67. Ionospheric Correction Parameters

* Parameters so indicated are two's complement, with the sign bit (+ or -) occupying the MSB.

** Note that 'sfu' (solar flux unit) is not a SI unit but can be converted as: 1 sfu = $10^{-22}$ W/(m$^2$*Hz)

The Effective Ionisation Level, $Az$, is computed from the three ionospheric coefficients broadcast within the navigation message as follows:

$$Az = a_{i0} + a_{i1} \times MODIP + a_{i2} \times (MODIP)^2 \qquad \text{Eq. 17}$$

where ($a_{i0}$, $a_{i1}$, $a_{i2}$) are the three broadcast coefficients described in Table 67 and MODIP is Modified Dip Latitude at the location of the user receiver, expressed in degrees. A table grid of MODIP values versus geographical location is provided in RD1.

The Ionospheric Disturbance Flags $SF_1$ to $SF_5$ are reserved for future use.

The five regions mentioned in Table 67 are defined as follows:

- region 1: for the northern region (60°<MODIP≤90°)
- region 2: for the northern middle region (30°<MODIP≤60°)
- region 3: for the equatorial region (-30°≤MODIP≤30°)
- region 4: for the southern middle region (-60°≤MODIP<-30°)
- region 5: for the southern region (-90°≤MODIP<-60°)

### 5.1.7. GST-UTC Conversion Algorithm and Parameters

The UTC time $t_{UTC}$ is computed through 3 different cases depending on the epoch of a possible leap second adjustment (scheduled future or recent past) given by $DN$, the day at the end of which the leap second becomes effective, and week number $WN_{LSF}$ to which $DN$ is referenced. "Day one" of $DN$ is the first day relative to the end/start of week and the WNLSF value consists of eight bits which are a modulo 256 binary representation of the Galileo week number to which the DN is referenced.

The parameters for GST to UTC conversion are defined in Table 68.

| Parameter | Definition | Bits | Scale factor | Unit |
|---|---|---|---|---|
| $A_0$ | Constant term of polynomial | 32* | $2^{-30}$ | s |
| $A_1$ | 1st order term of polynomial | 24* | $2^{-50}$ | s/s |
| $\Delta t_{LS}$ | Leap Second count before leap second adjustment | 8* | 1 | s |
| $t_{0t}$ | UTC data reference Time of Week | 8 | 3600 | s |
| $WN_{0t}$ | UTC data reference Week Number | 8 | 1 | week |
| $WN_{LSF}$ | Week Number of leap second adjustment | 8 | 1 | week |
| $DN$ | Day Number at the end of which a leap second adjustment becomes effective | 3** | 1 | day |
| $\Delta t_{LSF}$ | Leap Second count after leap second adjustment | 8* | 1 | s |
| **Total GST-UTC Conversion Size** | | **99** | | |

Table 68. Parameters for the GST-UTC Conversion

* Parameters so indicated are two's complement, with the sign bit (+ or -) occupying the MSB.
** The value range of DN is from 1 (= Sunday) to 7 (= Saturday).

In all computations the user must account for the truncated nature (roll-over) of the parameters ($DN$, $WN$, $WN_{0t}$, and $WN_{LSF}$), considering the following properties:

At the time of broadcast of the GST – UTC parameters,

- the absolute value of the difference between untruncated $WN$ and $WN_{0t}$ values does not exceed 127
- when $\Delta t_{LS}$ and $\Delta t_{LSF}$ differ, the absolute value of the difference between the untruncated $WN$ and $WN_{LSF}$ values received within the same subframe does not exceed 127.

In addition to the parameters listed in Table 68, the following parameters are used in the GST – UTC conversion algorithm:

$t_E$ is the GST as estimated by the user through its GST determination algorithm,

$WN$ is the week number to which $t_E$ is referenced.

**Case a**

Whenever the leap second adjustment time indicated by $WN_{LSF}$ and $DN$ is not in the past (relative to the user's present time) and the user's present time does not fall in the time span which starts six hours prior to the effective time and ends six hours after the effective time, $t_{UTC}$ is computed according to the following equations:

$$t_{UTC} = (t_E - \Delta t_{UTC})[\text{Modulo } 86400]$$
$$\text{where: } \Delta t_{UTC} = \Delta t_{LS} + A_0 + A_1\big(t_E - t_{0t} + 604800(WN - WN_{0t})\big) \qquad \text{Eq. 18}$$

**Case b**

Whenever the user's current time falls within the time span of six hours prior to the leap second adjustment time to six hours after the adjustment time, $t_{UTC}$ is computed according to the following equations ($\Delta t_{UTC}$ as defined in case a):

$$t_{UTC} = W[\text{Modulo}(86400 + \Delta t_{LSF} - \Delta t_{LS})]$$
$$\text{where: } W = (t_E - \Delta t_{UTC} - 43200)[\text{Modulo } 86400] + 43200 \qquad \text{Eq. 19}$$

**Case c**

Whenever the leap second adjustment time, as indicated by the $WN_{LSF}$ and $DN$ values, is in the "past" (relative to the user's current time) and the user's present time does not fall in the time span which starts six hours prior to the leap second adjustment time and ends six hours after the adjustment time, $t_{UTC}$ is computed according to the following equation:

$$t_{UTC} = (t_E - \Delta t_{UTC})[\text{Modulo } 86400]$$
$$\text{where: } \Delta t_{UTC} = \Delta t_{LSF} + A_0 + A_1\big(t_E - t_{0t} + 604800(WN - WN_{0t})\big) \qquad \text{Eq. 20}$$

### 5.1.8. GPS to Galileo System Time Conversion and Parameters

The difference between the Galileo and the GPS time scales, expressed in seconds, is given by the equation below.

$$\Delta t_{Systems} = t_{Galileo} - t_{GPS} = A_{0G} + A_{1G}[TOW - t_{0G} + 604800 \cdot (WN - WN_{0G})] \qquad \text{Eq. 21}$$

with

- $A_{0G}$ constant term of the offset $\Delta t_{systems}$
- $A_{1G}$ rate of change of the offset $\Delta t_{systems}$
- $t_{0G}$ reference time for GGTO data
- $t_{Galileo}$ GST time (s)
- $t_{GPS}$ GPS time(s)
- $WN$ GST Week Number
- $WN_{0G}$ Week Number of the GPS/Galileo Time Offset reference

The user must account in the above formula for the truncated nature (roll-over) of the weekly parameters ($WN$, $WN_{0G}$), considering that at the time of broadcast of the GGTO parameters, the absolute value of the difference between untruncated $WN$ and $WN_{0G}$ values does not exceed 31.

The GGTO parameters are formatted according to the values in Table 69.

When the GGTO is not available the GGTO parameters disseminated are: $A_{0G}$ (all ones -16 bits), $A_{1G}$ (all ones - 12 bits), $t_{0G}$ (all ones - 8 bits), $WN_{0G}$ (all ones - 6 bits). When a user receives all four parameters set to all ones the GGTO is considered as not valid.

| Parameter | Definition | Bits | Scale factor | Unit |
|---|---|---|---|---|
| $A_{0G}$ | Constant term of the polynomial describing the offset $\Delta t_{systems}$ | 16* | $2^{-35}$ | s |
| $A_{1G}$ | Rate of change of the offset $\Delta t_{systems}$ | 12* | $2^{-51}$ | s/s |
| $t_{0G}$ | Reference time for GGTO data | 8 | 3600 | s |
| $WN_{0G}$ | Week Number of GGTO reference | 6 | 1 | week |
| **Total GST-GPS Conversion Size** | | **42** | | |

Table 69. Parameters for the GPS Time to GST Offset Computation

* Parameters so indicated are two's complement, with the sign bit (+ or -) occupying the MSB.

### 5.1.9. Service Parameters

#### *5.1.9.1. Satellite ID*

The satellite Identification is coded with 6 bits and has the characteristics given in Table 70.

| Parameter | Definition | Bits | Scale Factor | Unit | Values |
|---|---|---|---|---|---|
| SVID | Satellite Identification | 6 | N/A | dimensionless | 0...63 |

Table 70. Satellite ID

Note: SVID = 0 is used in the broadcast almanac data to indicate unused almanac entries. SVID values 1 to 36 are defined in this OS SIS ICD. Higher values are reserved for future use.

#### *5.1.9.2. Issue Of Data*

The navigation data is disseminated in data batches each one identified by an Issue of Data. In nominal operation the navigation data (ephemeris, satellite clock correction and SISA) have limited validity duration depending on the data type. The identification of each batch by an Issue of Data (IOD) value enables:

- the users to distinguish the data in different batches received from each satellite
- to indicate to the user receiver the validity of the data (which have to be updated using new issue of navigation data)
- the user receiver to compute the full batch of data even if it misses some pages or start receiving the data somewhere during the transmission

Two IODs are defined for (Table 71):

- the ephemeris, satellite clock correction parameters and SISA
- the almanacs

| Data Type | Bits | Unit |
|---|---|---|
| Ephemeris, Clock correction and SISA $IOD_{nav}$ | 10 | dimensionless |
| Almanacs $IOD_a$ | 4 | dimensionless |

Table 71. IOD Values Mapping on Data Type

Each IOD has an associated reference time parameter disseminated within the batch.

Note: the broadcast group delay, ionospheric corrections, GST-UTC and GST-GPS conversion parameters, navigation data validity status and signal health status are not identified by any Issue of Data value.

#### 5.1.9.3. Navigation Data Validity and Signal Health Status

The signal health status and data validity status refer to the transmitting satellite. These status flags are used as service performance level notification (e.g. notification of satellite non availability). The navigation data validity status transmitted on E5a, E5b and E1, is coded on 1 bit, according to Table 72 and Table 73.

| Parameter | Definition | Bits | Scale factor | Unit |
|---|---|---|---|---|
| $E5a_{DVS}$ | E5a Data Validity Status | 1 | N/A | dimensionless |

Table 72. Data Validity Satellite Status (transmitted on E5a)

| Parameter | Definition | Bits | Scale factor | Unit |
|---|---|---|---|---|
| $E5b_{DVS}$ | E5b Data Validity Status | 1 | N/A | dimensionless |
| $E1\text{-}B_{DVS}$ | E1-B Data Validity Status | 1 | N/A | dimensionless |

Table 73. Data Validity Satellite Status (transmitted on E5b and E1-B)

The data validity status bit has the values shown in Table 74:

| Data Validity Status | Definition |
|---|---|
| 0 | Navigation data valid |
| 1 | Working without guarantee |

Table 74. Data validity Status Bit Values

The E5a signal health status transmitted on E5a-I is coded on 2 bits according to Table 75

| Parameter | Definition | Bits | Scale factor | Unit |
|---|---|---|---|---|
| $E5a_{HS}$ | E5a Signal Health Status | 2 | N/A | dimensionless |

Table 75. Signal Health Status for E5a (transmitted on E5a)

The E5b and E1-B/C signal health status transmitted on E5b and E1-B are coded on 2 bits according to Table 76.

| Parameter | Definition | Bits | Scale factor | Unit |
|---|---|---|---|---|
| $E5b_{HS}$ | E5b Signal Health Status | 2 | N/A | dimensionless |
| $E1\text{-}B_{HS}$ | E1-B/C Signal Health Status | 2 | N/A | dimensionless |

Table 76. Signal Health Status for E5b and E1-B/C (transmitted on E5b and E1-B)

The signal status bits have the values shown in Table 77.

| Signal Health Status | Definition |
|---|---|
| 0 | Signal OK |
| 1 | Signal out of service |
| 2 | Signal will be out of service |
| 3 | Signal Component currently in Test |

Table 77. Signal Health Status Bit Values

#### 5.1.9.4. Checksum

The checksum, which employs a CRC technique, is used to detect the reception of corrupted data. The checksum does not include the frame synchronisation pattern or the tail bit fields since these do not form part of the required message information. For the F/NAV and I/NAV data, a CRC of 24 bits is generated from the generator polynomial $G(X)$ described below.

$$G(X) = (1 + X)\, P(X) \qquad \text{Eq. 22}$$

$P(X)$ is a primitive and irreducible polynomial given by the following equation.

$$P(X) = X^{23} + X^{17} + X^{13} + X^{12} + X^{11} + X^{9} + X^{8} + X^{7} + X^{5} + X^{3} + 1 \qquad \text{Eq. 23}$$

The CRC is composed of a sequence of 24 parity bits $p_i$; for any $i$ from 1 to 24, $p_i$ is the coefficient of $X^{24-i}$ in $R(X)$ where:

- $R(X)$ is the remainder of the binary polynomial algebra division of the polynomial $m(X)\, X^{24}$ by $G(X)$ and
- $m(X)=m_1X^{k-1} + \ldots + m_{k-2}X^2 + m_{k-1}X + m_k$ with $m_1, m_2, \ldots, m_k$ the sequence of $k$-bits information to be protected by the CRC, and $m_1$ as the MSB.

#### 5.1.9.5. Secondary Synchronisation Pattern

The Secondary Synchronisation Pattern (SSP) is a pre-defined data bit sequence of 8 bits located at the end of the I/NAV pages. The SSP can assume three different configurations, named SSP1, SSP2 and SSP3.

Before FEC encoding, the SSP is inserted between the CRC and the tail bits in the I/NAV pages on E1, cycling among the three configurations as shown in Table 38, thus maintaining synchronisation to ($GST_0$ + 1 s) modulo 6 seconds.

After FEC encoding, the last 16 symbols of E1 I/NAV pages provide three pre-defined sequences with well-defined cross-correlation properties. These are shown in Table 78.

| | **SSP1** | **SSP2** | **SSP3** |
|---|---|---|---|
| Plain SSP configurations | 00000100 | 00101011 | 00101111 |
| Encoded SSP configurations (last 16 symbols of the I/NAV E1 pages, after FEC encoding of the 8 plain SSP bits + 6 tail bits) | 1110100100100101 | 0110110001001110 | 1101000000111110 |

Table 78. Bit and symbol sequences of the three SSP configurations.

The Secondary Synchronisation Pattern allows a receiver to correlate a local replica of the encoded pattern configurations with the received data symbols, after de-interleaving. As soon as any occurrence of the three SSP configurations is detected in the incoming symbol stream, the receiver has the knowledge of the GST (modulo 6 seconds) without the need for successful data decoding.

Note: SSP configurations are an evolution of the Galileo navigation message and as such will be gradually deployed to all Galileo satellites, including those already in orbit. During this deployment phase the not-yet upgraded satellites will be downlinking a legacy reserved sequence.

SSP configurations will not be downlinked while I/NAV dummy messages are transmitted on E1-B (see Table 53).

In both cases above, the contents transmitted instead of the SSP configurations are not intended for time synchronisation and have low cross-correlation with the SSP configurations provided in Table 78.

### 5.1.10. Almanac

The almanac data is a reduced-precision subset of the clock and ephemeris parameters of the active satellites in orbit. The user receiver utilises the algorithm described in section 5.1.1 to compute the positions of the Galileo satellites. All parameters appearing in the equations of Table 61, but not included in the content of the almanac, are set to zero for satellite position determination.

The Galileo almanac orbital parameters consist of

- Semi-major axis
- Eccentricity
- Inclination
- Longitude of the ascending node
- Argument of perigee
- Mean anomaly

The almanac time correction is provided by the coefficients $a_{f0}$ and $a_{f1}$ of a first order polynomial, and is evaluated as per section 5.1.4 assuming the clock drift rate is set to zero.

Predicted signal health status is provided as well, which can be used to determine which Galileo satellites should be tracked by the receiver.

The $IOD_a$ disseminated with the almanac data allows detection of almanac batch changes. The almanac reference time $t_{0a}$ and reference week number $WN_a$ apply to the orbital parameters and to the clock correction parameters from the associated almanac batch. The two-bit $WN_a$ provides the two least significant bits of the associated GST week number.

The almanac parameters are transmitted according to the characteristics stated in Table 79 .

| Parameter | Definition | Bits | Scale factor | Unit |
|---|---|---|---|---|
| SVID | Satellite ID (1 constellation of 36 satellites) | 6 | 1 | dimensionless |
| $\Delta(A^{1/2})$ | Difference between the square root of the semi-major axis and the square root of the nominal semi-major axis ($A_{nominal}$ according to Table 1): $\Delta(A^{1/2}) = A^{1/2} - A^{1/2}_{nominal}$ | 13* | $2^{-9}$ | meters$^{1/2}$ |
| $e$ | Eccentricity | 11 | $2^{-16}$ | dimensionless |
| $\delta_i$ | Difference between the inclination angle at reference time and the nominal inclination ($i_{nominal}$ according to Table 1): $\delta_i = i_0 - \frac{i_{nominal}}{180°}$ | 11* | $2^{-14}$ | semi-circles*** |
| $\Omega_0$ | Longitude of ascending node of orbital plane at weekly epoch**** | 16* | $2^{-15}$ | semi-circles*** |
| $\dot{\Omega}$ | Rate of change of right ascension | 11* | $2^{-33}$ | semi-circles/s*** |
| $\omega$ | Argument of perigee | 16* | $2^{-15}$ | semi-circles*** |

| Parameter | Definition | Bits | Scale factor | Unit |
|---|---|---|---|---|
| $M_0$ | Satellite mean anomaly at reference time | 16* | $2^{-15}$ | semi-circles*** |
| $a_{f0}$ | Satellite clock correction bias "truncated" | 16* | $2^{-19}$ | s |
| $a_{f1}$ | Satellite clock correction linear "truncated" | 13* | $2^{-38}$ | s/s |
| $E5a_{HS}$** | Satellite E5a signal health status | 2 | N/A | dimensionless |
| $E5b_{HS}$** | Satellite E5b signal health status | 2 | N/A | dimensionless |
| $E1\text{-}B_{HS}$** | Satellite E1-B/C signal health status | 2 | N/A | dimensionless |
| **Total Satellite Almanac Size** | | **131(F/NAV) 133(I/NAV)** | | |
| $IOD_a$ | Almanac Issue Of Data | 4 | N/A | dimensionless |
| $t_{0a}$ | Almanac reference time | 10 | 600 | s |
| $WN_a$ | Almanac reference Week Number | 2 | 1 | week |
| **Total Almanac References Size** | | **16** | | |

Table 79. Almanac Parameters

* Parameters so indicated are two's complement, with the sign bit (+or-) occupying the MSB.

** The F/NAV almanac transmitted on the E5a-I component contains the signal health status $E5a_{HS}$. The I/NAV almanac transmitted on the E5b-I and E1-B components contains both signal health status $E5b_{HS}$ and $E1\text{-}B_{HS}$.The two-bit health status is encoded as per Table 77.

*** Note that the 'semi-circle' is not a SI unit but can be converted as: 1 semi-circle = $\pi$ radian.

**** More precisely, $\Omega_0$ is the longitude of ascending node of orbital plane at the weekly epoch propagated to the reference time $t_{0a}$ at the rate of change of right ascension.

### 5.1.11. Reduced Clock and Ephemeris Data

The Reduced Clock and Ephemeris Data (Reduced CED) is a compact set of ephemeris and clock minus radial error correction information, transmitted within one single I/NAV word and with a reduced accuracy with respect to the ephemeris of section 5.1.1. Receivers can use these reduced-precision parameters to compute an initial position fix in case a full ephemeris and clock correction set (I/NAV words 1 to 4) has not yet been received.

The Reduced CED for each Galileo satellite is composed of 8 parameters:

- 6 orbital parameters
- 2 clock minus radial error correction coefficients.

The Reduced CED for each Galileo satellite is according to the characteristics stated in Table 80.

| Parameter | Definition | Bits | Scale factor | Unit |
|---|---|---|---|---|
| $\Delta A_{red}$ | Difference between the Reduced CED semi-major axis and the nominal semi-major axis ($A_{nominal}$ according to Table 1): $\Delta A_{red} = A_{red} - A_{nominal}$ | 5* | $2^8$ | meters |
| $e_{xred}$ | Reduced CED eccentricity vector component $x$*** | 13* | $2^{-22}$ | dimensionless |
| $e_{yred}$ | Reduced CED eccentricity vector component $y$*** | 13* | $2^{-22}$ | dimensionless |

| Parameter | Definition | Bits | Scale factor | Unit |
|---|---|---|---|---|
| $\Delta i_{0red}$ | Difference between the Reduced CED inclination angle at reference time and the nominal inclination ($i_{nominal}$ according to Table 1): $\Delta i_{0red} = i_{0red} - \frac{i_{nominal}}{180°}$ | 17* | $2^{-22}$ | semi-circles** |
| $\Omega_{0red}$ | Reduced CED longitude of ascending node at weekly epoch | 23* | $2^{-22}$ | semi-circles** |
| $\lambda_{0red}$ | Reduced CED mean argument of latitude*** | 23* | $2^{-22}$ | semi-circles** |
| $a_{f0red}$ | Reduced CED satellite clock bias correction coefficient | 22* | $2^{-26}$ | s |
| $a_{f1red}$ | Reduced CED satellite clock drift correction coefficient | 6* | $2^{-35}$ | s/s |
| **Total Reduced CED size** | | **122** | | |

Table 80. Reduced Clock and Ephemeris Data parameters

* Parameters so indicated are two's complement, with the sign bit (+ or -) occupying the MSB.

** Note that the 'semi-circle' is not a SI unit but can be converted as: 1 semi-circle = $\pi$ rad, with $\pi$ as per Table 61.

Table 81. *** Definition of orbital elements: $e_x = e \cdot cos(\omega)$, $e_y = e \cdot sin(\omega)$, $\gamma_0 = M_0 + \omega$

The user can compute the ECEF coordinates of the SV's antenna phase centre position and the satellite time minus radial error correction at GST time $t$ utilising the user algorithm for ephemeris determination listed in Table 61 and the satellite time correction algorithm defined in section 5.1.4. Additional computation steps, which are required when working with Reduced CED parameters instead of full-precision CED parameters, are listed in Tables 81-83.

Notes:

- The Reduced CED parameters introduced in this section cannot be combined with the full-precision CED parameters of section 5.1.1-5.1.3 when calling the user algorithms for ephemeris determination and/or satellite time correction, since the two sets are not cross-compatible.
- Computation of satellite position and clock correction from Reduced CED must use the parameters from a single Reduced CED word (i.e. parameters or intermediate results derived from different Reduced CED words cannot be combined).

The user can compute the Reduced CED reference time as described in Table 81. A set of Reduced CED parameters is usable for 10 minutes starting from its reference time.

| Reference Time Computation | Description |
|---|---|
| $t_{0r} = modulo\left(30 * \left\lfloor \frac{TOT_{RedCED}}{30} \right\rfloor + 1s, 604800s\right)^*$ | Reduced CED reference time ($TOT_{RedCED}$ is the start time of transmission of the Reduced CED word in GST and ⌊.⌋ indicates the integer part) |

Table 82. Reduced CED parameters Reference Time Computation

* Note: Since both $t_{0e}$ and $t_{0c}$ are reference times of week (GST modulo 604800 seconds), $t_{0r}$ has to be expressed as modulo 604800 seconds value when replacing the reference times $t_{0e}$ and $t_{0c}$. The Reduced CED reference time is aligned with the E1-B sub-frame boundary (see section 4.3.3.)

As previously described, in the following Tables 82 and 83 the additional computation steps required when working with Reduced CED parameters are described for the ephemeris and the clock correction computation, respectively.

| Usage of Reduced CED Orbital Parameters | Description |
|---|---|
| $A^{1/2} = A_{red}^{1/2}$ | Square root of the semi-major axis |
| $i_0 = i_{0red}$ | Inclination angle at reference time * |
| $e = \sqrt{e_{xred}^2 + e_{yred}^2}$ | Eccentricity |
| $\omega = tan^{-1}\left(\frac{e_{yred}}{e_{xred}}\right)$ | Argument of perigee * |
| $M_0 = \lambda_{0red} - \omega$ | Mean anomaly at reference time * |
| $\Omega_0 = \Omega_{0red}$ | Longitude of ascending node of orbital plane at weekly epoch * |
| $\Delta n = 0, \dot{\Omega} = 0, \dot{i} = 0, C_{uc} = 0, C_{us} = 0, C_{rc} = 0, C_{rs} = 0, C_{ic} = 0, C_{is} = 0$ | Correction terms |
| $t_{0e} = t_{0r}$ | Ephemeris reference time |

Table 83. Introduction of Reduced CED Orbital Parameters into Computation of Satellite Position

* Angular parameters are in radians for further processing according to Table 61, i.e. insertion of $i_{0red}$, $\lambda_{0red}$ and $\Omega_{0red}$ in units of radians.

After having applied the steps described in Table 82, GTRF coordinates of the SV antenna phase centre position at time $t$ can be computed utilising the user algorithm for ephemeris determination defined in Table 61.

The combined correction for clock minus radial error is computed using the satellite time correction algorithm for $\Delta t_{SV}$ as defined in section 5.1.4 with input parameters from Reduced CED applied as specified in table 83.

| Usage of Reduced CED Clock minus Radial Error Correction Coefficients | Description |
|---|---|
| $a_{f0} = a_{f0red}$ | SV clock bias correction coefficient |
| $a_{f1} = a_{f1red}$ | SV clock drift correction coefficient |
| $a_{f2} = 0$ | SV clock drift rate correction coefficient |
| $t_{0c} = t_{0r}$ | Clock correction data reference Time of Week |

Table 84. Introduction of Reduced CED Clock minus Radial Error Correction Coefficients into Computation of $\Delta t_{SV}$

The subsequent PVT computation can use $\Delta t_{SV}$ calculated from Reduced CED as clock correction, but must then combine this clock correction with the satellite position computation using orbital parameters from the same Reduced CED word. This is important because the Reduced CED clock correction coefficients incorporate a fraction of the radial satellite position, in order to minimise ranging errors due to numerical quantisation of Reduced CED parameters.

Note that $\Delta t_{SV}$ from Reduced CED is optimised for the dual-frequency signal combination (E1/E5b). Single-frequency OS (E1) users may use BGD(E1,E5b) introduced in section 5.1.5 in order to improve the Reduced CED ranging accuracy.

The Galileo satellites transmit Reduced CED only if the E5b and E1-B Data Validity Status and Signal Health Status flags defined in section 5.1.9.3 are set to "0", and if SISA(E1,E5b)≠NAPA as per section 5.1.12. Note that an absence of Reduced CED in the broadcast may also be due to operational reasons unrelated to the aforementioned SIS flags.

### 5.1.12. Signal – In – Space Accuracy (SISA)

Signal – In – Space Accuracy (SISA) is a prediction of the minimum standard deviation (1-sigma) of the unbiased Gaussian distribution which overbounds the Signal – In – Space Error (SISE) predictable distribution for all possible user locations within the satellite coverage area. When no accurate prediction is available (SISA = NAPA), this is an indicator of a potential anomalous SIS.

The SISA Index shall be encoded according to the values stated in the following table.

| SISA Index | SISA Value |
|---|---|
| 0.....49 | 0cm to 49cm with 1cm resolution |
| 50.....74 | 50cm to 0.98m with 2cm resolution |
| 75.....99 | 1m to 1.96m with 4cm resolution |
| 100..... 125 | 2m to 6m with 16cm resolution |
| 126..... 254 | Spare |
| 255 | No Accuracy Prediction Available (NAPA) |

Table 85. SISA Index Values

The Signal – In – Space Accuracy (SISA) shall be coded according to the values stated in the following table.

| Parameter | Definition | Bits | Scale factor | Units |
|---|---|---|---|---|
| SISA(E1,E5a) | SISA index for dual frequency E1-E5a | 8 | N/A | dimensionless |
| SISA(E1,E5b) | SISA index for dual frequency E1-E5b | 8 | N/A | dimensionless |

Table 86. SISA Parameters

### 5.1.13. Protection of I/NAV Clock and Ephemeris Data by means of Reed-Solomon Outer Forward Error Correction

In order to provide the user with an option for a more robust decoding of I/NAV Clock and Ephemeris Data (CED), an Outer Forward Error Correction (FEC2) based on Reed Solomon (RS) encoding is provided within the E1-B I/NAV message. The FEC2 RS encoding is applied to the data bits of I/NAV word types 1-4.

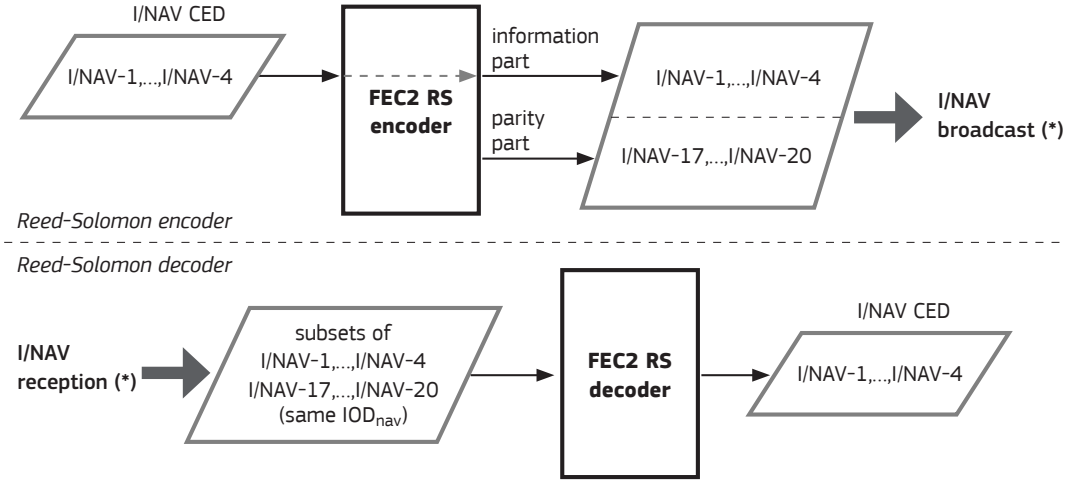


Figure 16. Protection of I/NAV CED by Outer Forward Error Correction (FEC2 RS)

* Like all other I/NAV words, the I/NAV words 1-4 and 17-20 are also subject to convolutional encoding (FEC Viterbi) and interleaving before broadcast (see Chapter 4.1.4.). Users must perform de-interleaving and Viterbi decoding after symbol demodulation and before optional application of the FEC2 RS decoding.

The FEC2 RS is a systematic coding scheme, meaning that the CED is provided as unaltered information within I/NAV words 1-4 in every subframe. The FEC2 RS CED parity words are provided in words 17-20 and may differ in subsequent subframes. As depicted in Figure 16, users can either process just the CED words performing the standard Viterbi decoding or, alternatively, process also the FEC2 RS CED parity words in order to benefit from RS erasure and error correction capabilities.

Annex E provides a reference algorithm for the FEC2 RS decoder, which shows how the FEC2 RS CED parity words can be exploited by the user.

The encoding is constructed based upon a Galois Field of order 256, GF(256), using code symbols ('octets') consisting of 8 data or parity bits. The shortened Reed-Solomon code vector (or alternatively, shortened RS code word) comprises 118 octets and is subdivided into RS information vector $\boldsymbol{C}_{RS}$ (58 octets) and RS parity vector $\boldsymbol{\gamma}_{RS}$ (60 octets).

Annex F provides detailed FEC2 Reed-Solomon encoder parameters, implementation details, and one encoding example.

#### 5.1.13.1. RS information vector

The FEC2 RS information vector $\boldsymbol{C}_{RS}$ (58 octets) represented in Figure 17, is constructed from the concatenation of the octet vectors $\boldsymbol{C}_{RS,0}$, $\boldsymbol{C}_{RS,1}$, $\boldsymbol{C}_{RS,2}$ and $\boldsymbol{C}_{RS,3}$, which are derived from I/NAV word types 1 to 4 (all words with the same IODnav).

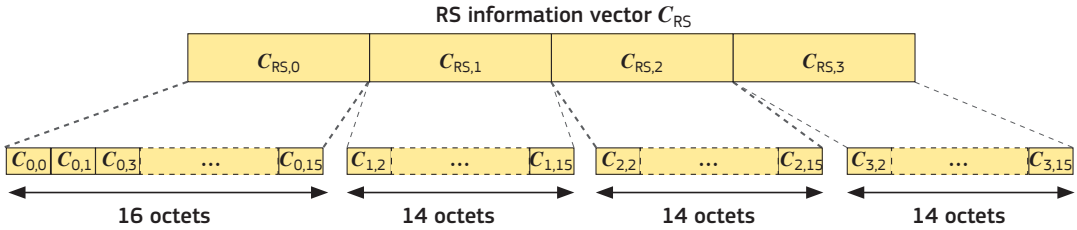


Figure 17. FEC2 RS information vector $C_{RS}$

The FEC2 RS information vector is built as follows:

a. The octet vector $C_{RS,0}$=[$C_{0,0}$ ... $C_{0,15}$] (16 octets) is derived from I/NAV word type 1 as per figure 18:

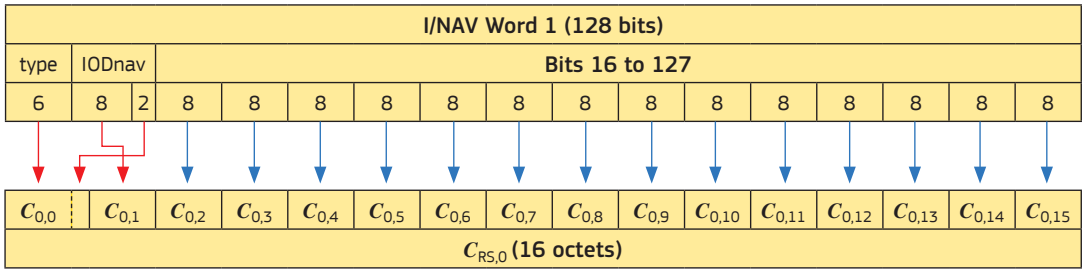


Figure 18. Derivation of the octet vector $C_{RS,0}$

- The octet $C_{0,0}$ consists of a concatenation of the word type field (bit pattern '000001' for word type 1) and of the 2 LSBs of the IODnav derived from word type 1.
- The octet $C_{0,1}$ consists of the 8 MSBs of IODnav derived from word type 1.
- The octets $C_{0,2}$ to $C_{0,15}$ are built by partitioning I/NAV word type 1 bits 16 to 127 into octets while maintaining the order of MSB to LSB.

b. The octet vectors $C_{RS,1}$=[$C_{1,2}$ ... $C_{1,15}$], $C_{RS2}$=[$C_{2,2}$ ... $C_{2,15}$] and $C_{RS,3}$=[$C_{3,2}$ ... $C_{3,15}$] (14 octets each) are derived from I/NAV word types 2, 3 and 4 respectively:

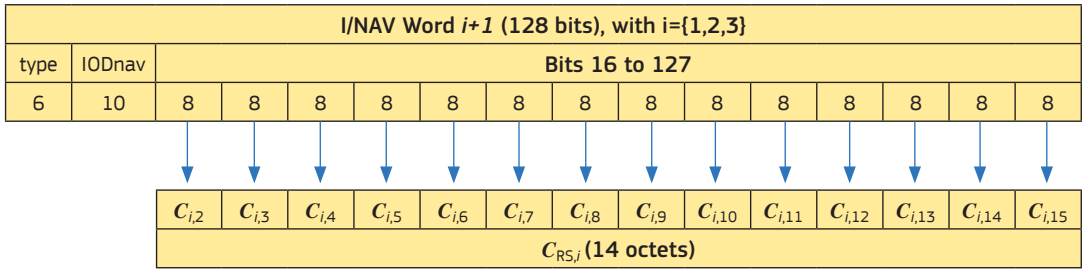


Figure 19. Derivation of the octet vectors $C_{RS,1}$, $C_{RS,2}$ and $C_{RS,3}$

- The octets $C_{i,0}$ and $C_{i,1}$ ($i$ = 1,2,3) corresponding to bits 0...15 (word type and IODnav) of I/NAV word types 2...4 are not included in the RS information vector, as this information is already provided through $C_{0,0}$ and $C_{0,1}$.
- The octets $C_{i,2}$ to $C_{i,15}$ are built by partitioning I/NAV word type 2...4 bits 16 to 127 into octets while keeping the order of MSB to LSB.

c. The FEC2 RS information vector $C_{RS}$ is obtained by concatenating the octet vectors $C_{RS,0}$, $C_{RS,1}$, $C_{RS,2}$, and $C_{RS,3}$ as per figure 17.

### 5.1.13.2. RS parity vector

The FEC2 RS parity vector $\gamma_{RS}$ (60 octets) consists of the concatenation of the octet vectors $\gamma_{RS,0}$, $\gamma_{RS,1}$, $\gamma_{RS,2}$ and $\gamma_{RS,3}$ according to the following figure.

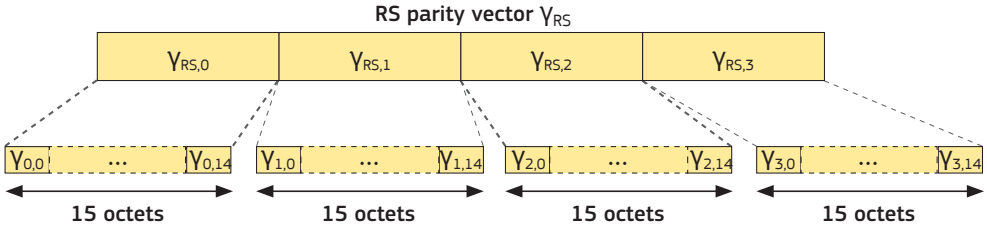


Figure 20. FEC2 RS parity vector $\gamma_{RS}$

The octet vectors $\gamma_{RS,0}$, $\gamma_{RS,1}$, $\gamma_{RS,2}$ and $\gamma_{RS,3}$ (15 octets each) are broadcast in I/NAV word types 17, 18, 19 and 20 (FEC2 RS CED words), where

- the field 'type' contains the binary FEC2 Reed-Solomon word type number,
- the field 'L' contains the 2 LSBs of IODnav,
- the remaining bits 6 to 13 and bits 16 to 127 provide the 15 octets $\gamma_{i,0}$ to $\gamma_{i,14}$

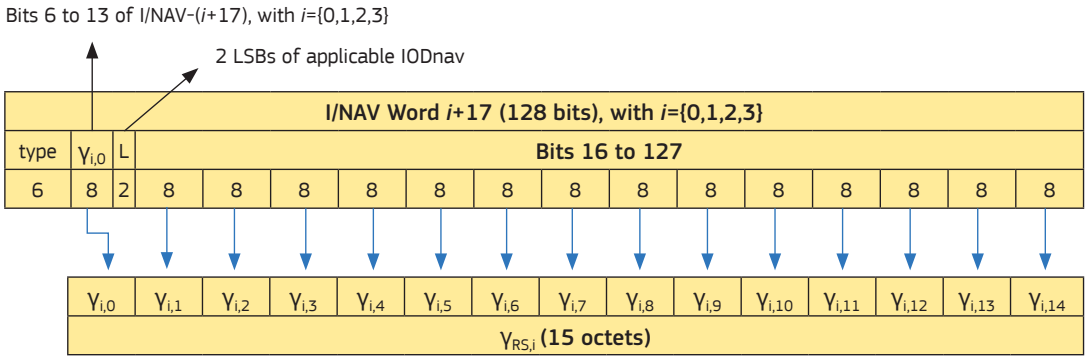


Figure 21. Derivation of the octet vectors $\gamma_{RS,0}$, $\gamma_{RS,1}$, $\gamma_{RS,2}$ and $\gamma_{RS,3}$

Note: The 2 LSBs of IODnav are provided to support detection of changes to IODnav after Viterbi decoding and prior to an RS decoding attempt.

A user may attempt to recover the 58 octets of the shortened RS information vector, containing the I/NAV clock and ephemeris data, with any combination of four or more received words with different types within the range 1 to 4 and 17 to 20. All words must have the same IODnav.

The RS erasure and error correction capability can be used

- to recover missing RS octets from the RS information vector and/or
- to correct errors contained in received octets of the RS information vector.

## 5.2. SAR RLM Data

Each Return Link Message encapsulated in a SAR data page contains the following data:

- Beacon ID (60 bits):
  The Beacon ID is identical to the 60 bits (15 Hexadecimal characters) of the standard beacon identification defined in the COSPAS – SARSAT T.001 document (RD2). It uniquely identifies the beacon to which the RLM is addressed.

- Message code (4 bits):
  The Message Code defines the Return Link Service according to Table 86.

| RLM | Message Code (4 bits) | Return Link Service |
|---|---|---|
| Short-RLM | 0 0 0 1 | Acknowledgement Service |
| Short-RLM | 1 1 1 1 | Test Service |
| Short-RLM | Other codes | Spare |
| Long-RLM | All codes to be defined | Spare |

Table 87. SAR RLM Message Code Values

- Parameters field (16 bits for the short RLM, 96 bits for the long RLM):
  The Parameters field provides the information related to the specific Return Link Service identified by the "Message Code".
  The last bit of the Parameters field, i.e. bit 16 of the Short-RLM Parameters field and bit 96 of the Long-RLM Parameters field, is a SAR RLM data parity bit. This parity bit shall ensure that the total number of ones (1) in the fields "Beacon ID", "Message Code" and "Parameters", (including spare bits), is even.
  The Parameters field values for Return Link Services based on Short-RLM are defined in Table 87:

| Return Link Service | Beacon Id | | | Message Code | | | | Short-RLM Parameters Field | | | | | | | | | | | | | | | |
|---|---|---|---|---|---|---|---|---|---|---|---|---|---|---|---|---|---|---|---|---|---|---|---|
| | 60 | | | 4 | | | | 16 | | | | | | | | | | | | | | | |
| | Bit 1** | to | Bit 60 | Bit 61 | Bit 62 | Bit 63 | Bit 64 | Bit 65 | Bit 66 | Bit 67 | Bit 68 | Bit 69 | Bit 70 | Bit 71 | Bit 72 | Bit 73 | Bit 74 | Bit 75 | Bit 76 | Bit 77 | Bit 78 | Bit 79 | Bit 80 |
| Acknowledgement Service - Type 1* | 15 Hex Id | | | 0 | 0 | 0 | 1 | 1 | 0 | Spare | | | | | | | | | | | | | Parity |
| Test Service | 15 Hex Id | | | 1 | 1 | 1 | 1 | Reserved | | | | | | | | | | | | | | | Parity |

Table 88. SAR Short-RLM Data Values

* Combinations of Message Code [0001] (Acknowledgement Service) with other values of bits 65 – 66 are spare. Refer to COSPAS – SARSAT T.001 document (RD2) for the service description of the acknowledgement Type 1.

** Bit numbers are counted after concatenating the four parts of Short-RLM data described in section 4.3.7 "SAR Field Structure". Bit 1 is received first, Bit 80 is received last.

The Parameters field values for Long-RLM are currently not defined.

# Annex A - List of Acronyms

| | |
|---|---|
| AltBOC | Constant envelope modulation scheme for combining two sidebands each consisting itself of two binary signals (in I- and Q-component). |
| ARNS | Aeronautical Radionavigation Services |
| BGD | Broadcast Group Delay |
| BOC | Binary Offset Carrier |
| CBOC | Composite Binary Offset Carrier modulation |
| CDMA | Code Division Multiple Access |
| CED | Clock and Ephemeris Data |
| CoP | Centre of Phase |
| COSPAS – SARSAT | Cosmicheskaya Systyema Poiska Avariynich Sudov - Search and Rescue Satellite Aided Tracking |
| CRC | Cyclic Redundancy Check |
| CS | Commercial Service |
| DME | Distance Measuring Equipment |
| DN | Day Number |
| ECEF | Earth-Centred, Earth-Fixed |
| EGNOS | European Geostationary Navigation Overlay Service |
| FEC | Forward Error Correction |
| FEC2 | Outer Forward Error Correction |
| GF | Galois Field |
| GGTO | Galileo/GPS Time Offset |
| GNSS | Global Navigation Satellite System |
| GPS | Global Positioning System |
| GST | Galileo System Time |
| GTRF | Galileo Terrestrial Reference Frame |
| I | In-phase signal component |
| ICD | Interface Control Document |
| ID | Identifier |
| IOD | Issue Of Data |
| ITU | International Telecommunication Union |
| ITU-R | ITU – Radiocommunication Sector |
| JTIDS | Joint Tactical Information Distribution System |
| LAN | Longitude of the Ascending Node |
| LFSR | Linear Feedback Shift Register |
| LSB | Least Significant Bit |
| Mcps | Mega chips per second |
| MHz | Megahertz |
| MIDS | Multifunctional Information Distribution System |
| MODIP | MOdified DIP latitude |
| MSB | Most Significant Bit |
| MUX | Multiplexer |
| N/A | Not Applicable |
| NAPA | No Accuracy Prediction Available |
| NIB | Non-Interference Basis |
| NRZ | Non-Return-to-Zero |
| OS | Open Service |
| PSK | Phase-Shift Keying |

| | |
|---|---|
| PVT | Position, Velocity and Time |
| Q | Quadrature Signal Component |
| QPSK | Quadrature Phase-Shift Keying |
| RAAN | Right Ascension of the Ascending Node |
| RF | Radio Frequency |
| RHCP | Right-Hand Circular Polarisation |
| RLM | Return Link Message |
| RNSS | Radionavigation-Satellite Services |
| RS | Reed-Solomon |
| SAR | Search-and-Rescue Service/Signal |
| SI | International System of Units (Le Système international d'unités) |
| SIS | Signal-In-Space |
| SISA | Signal-In-Space Accuracy |
| sfu | Solar flux unit |
| SNF | Satellite Navigation Frame |
| SSP | Secondary Synchronisation Pattern |
| SV | Space Vehicle |
| SVID | Space Vehicle IDentifier |
| TACAN | TACtical Air Navigation (system) equipment |
| TOT | Time Of Transmission |
| TOW | Time Of Week |
| TTF | Time To Fix |
| UTC | Coordinated Universal Time |
| WN | Week Number |

# Annex B - Definitions and Nomenclature

| | |
|---|---|
| E5-Signal | The Galileo E5-signal consists of the signals E5a, E5b (and modulation product signals) and is transmitted in the frequency band 1164 - 1215 MHz allocated to RNSS with a worldwide co-primary status. The E5-signal shares the band with the co-primary Aeronautical Radionavigation Service (ARNS) (ITU-R Radio Regulations). Moreover, it shares the band with other RNSS-signals provided by EGNOS, GPS-L5, GLONASS etc. as well as signals of the ARNS (DME, TACAN). Also found in the band is the JTIDS-MIDS signal which is permitted on an NIB. |
| E5a-Signal | The Galileo E5a-signal is an inherent element of the E5-signal and consists of a data-component transmitted in the in-phase component and a pilot-component transmitted in the quadrature component. The E5a-signal provides the F/NAV message supporting Galileo Open Service and overlaps (in the spectrum) with the GPS-L5-signal. |
| E5b-Signal | The Galileo E5b-signal is an inherent element of the E5-signal and consists of a data-component transmitted in the in-phase component and a pilot-component transmitted in the quadrature component. The E5b-signal provides the I/NAV message and supports the Open Service and the Commercial Service. |
| E6-Signal | The Galileo E6-signal consists of the signal components E6-B and E6-C and is transmitted in the frequency band 1260 - 1300 MHz allocated on a worldwide co-primary basis (ITU-R Radio Regulations), sharing with radar systems of the radio navigation and radiolocation service. The signal components E6-B and E6-C are data-component and pilot-component respectively. The E6-signal provides the C-NAV message and supports Commercial Service. |
| E1- Signal | The Galileo E1-signal comprises the signal components E1-B and E1-C and is transmitted in the frequency band 1559 - 1591 MHz allocated to RNSS and ARNS on a worldwide co-primary basis (ITU-R Radio Regulations).<br>The signal components E1-B and E1-C are data-component and pilot-component respectively. The E1-signal provides the I/NAV message and supports the Open Service and the Commercial Service. |
| Navigation Data Stream | Sequence of bits carrying the navigation data information by using a frame structured transmission protocol. |
| F/NAV Message | Navigation message provided by the E5a signal for Open Service. |
| I/NAV Message | Navigation message provided by E5b and E1-B signals, supporting the Open Service and the Commercial Service. |
| C/NAV Message | Commercial navigation message type provided by the E6-B signal supporting Commercial Service. |
| Data component | A data component is the result of modulating ranging code, sub-carrier (if present) and secondary code with a navigation data stream. |
| Pilot component | A pilot component (or dataless component) is made of ranging code, sub-carrier (if present) and secondary code only, not modulated by a navigation data stream. |
| Receiver reference bandwidth | The bandwidth of a hypothetical receiver with ideal (rectangular frequency response) input filters |

# Annex C – Galileo E1 and E5 Primary Codes

## C.1. Introduction

This annex provides the primary codes (expressed in hexadecimal format) for the Galileo Open Signal components E5a-I, E5a-Q, E5b-I, E5b-Q, E1-B and E1-C in sections C.3 to C.8, respectively. The E5 codes are derived from LFSR sequences as described in Section 3.4.1 and provided here for convenience and completeness.

## C.2. Hexadecimal Coding Convention

Generally, one hexadecimal symbol (0,..,9, A,..,F) corresponds to four succeeding code-chips. The leftmost code-chip corresponds to the first code-chip in time, and the rightmost code-chip corresponds to the last code-chip in time. The first group is built with the first four code-chips, the second group with the fifth to eighth code-chip etc.

For primary codes whose length is not divisible by four, the last hexadecimal symbol is built from the last group of code-chips, filled up with zeros at the end in time (to the right) to reach a final length of 4 binary symbols. The translation from the chip-stream to hexadecimal symbol stream is illustrated with an example code of length 10 in Table 88.

| **Time (in Chip)** | 1 | 2 | 3 | 4 | 5 | 6 | 7 | 8 | 9 | 10 | 11 | 12 |
|---|---|---|---|---|---|---|---|---|---|---|---|---|
| **Logic Representation of Chip-Values** | 1 | 1 | 1 | 0 | 1 | 1 | 0 | 0 | 0 | 1 | - | - |
| **Logic Representation Filled up with Zeros at the End** | 1 | 1 | 1 | 0 | 1 | 1 | 0 | 0 | 0 | 1 | 0 | 0 |
| **Logic to Decimal Translation** | 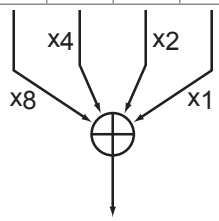 | | | | 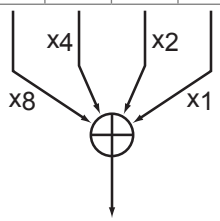 | | | | 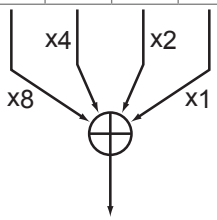 | | | |
| **Decimal Representation** | 14 | | | | 12 | | | | 4 | | | |
| **Hexadecimal Representation** | E | | | | C | | | | 4 | | | |

Table 89. Example for the Translation of Logical (binary) Spreading Code into Hexadecimal Representation

| Component | Primary Code Length (chips) | Number of Hexadecimal Symbols | Number of Filled up Zeros | Number of Defined Codes |
|---|---|---|---|---|
| E5a-I | 10230 | 2558 | 2 | 50 |
| E5a-Q | 10230 | 2558 | 2 | 50 |
| E5b-I | 10230 | 2558 | 2 | 50 |
| E5b-Q | 10230 | 2558 | 2 | 50 |
| E1-B | 4092 | 1023 | 0 | 50 |
| E1-C | 4092 | 1023 | 0 | 50 |

Table 90. Primary Code-Length and Hexadecimal Representation Characteristics for the Galileo Signal Components.

## C.3. to C.8. Primary Codes

The primary codes can be accessed/saved from the attachments panel of the pdf file reader.

# Annex D – FEC Coding and Interleaving Numerical Examples

This appendix provides input and output numerical examples for the convolutional encoding described in Section 4.1.4.1 and for the subsequent interleaving described in Section 4.1.4.2. The same examples can be applied to a decoder and a de-interleaver, by simply using them in the reverse order.

In this annex two examples are provided, namely one for F/NAV and one for I/NAV. The only difference between the two is the size of the block interleaver, as the same convolutional coding is employed for both messages.

## D.1. F/NAV FEC Coding and Interleaving Numerical Example

Let the input to the convolutional encoder, $M_{input}^{FNAV}$, be the following 244 – bit binary string:

11111111 11110000 11001100 10101010 00000000 00001111 00110011 01010101
11100011 11101100 11011111 10001010 00011100 00010011 00100000 01110101
01010101 01100001 01100010 01100011 10101010 10011110 10011101 10011100
00011100 00100011 00001101 00111001 11011100 11101100 0000

Note that the last six bits of the string $M_{input}^{FNAV}$ are 6 zeros, corresponding to the tail bits described in Section 4.2.2.2.

The output of the convolutional encoder (described in Table 24 and Figure 13 within Section 4.1.4.1), $M_{encoded}^{FNAV}$, is the following 488 – symbol binary string:

10001100 00011010 10101010 01110011 00110001 01011010 01101111 01011001
01111000 10010101 01010101 10001100 11001110 10100101 10010000 10100110
10000100 00000010 00000010 00011011 10011001 11101011 01011100 00011000
10111011 11111101 11111101 11100100 01100110 00010100 10100011 11100111
10100110 01100110 01101011 00010000 00011100 00011101 01010001 10101110
00111001 11101001 10010100 11101111 11100011 11100010 10101110 01010001
11111101 00111101 11110000 10101001 11011000 00110010 00111111 10000100
10010010 10010110 00100100 10101011 01001110

The encoded symbols of the string $M_{encoded}^{FNAV}$ are given as input to the F/NAV block interleaver described in Table 25 within Section 4.1.4.2, characterised by 61 columns and 8 rows. The output of the interleaver, $M_{interleaved}^{FNAV}$, is the following 488 – symbol binary string:

10100000 01011111 10001100 11110011 10000001 01111110 10111001 11010000
10111101 01000000 00110011 11001011 00010010 11101101 01000000 01001110
10100001 01000001 00111110 11111000 01110111 10111101 10001100 10111011
11000100 00110111 11001000 00111101 01000011 11011101 10001110 01111001
10000001 11111110 00000010 11011101 00101101 10100001 11000001 00111110
11000001 00111110 11100110 10011001 01100001 10110101 11011000 00100101
11010010 00101111 10000100 01111000 00011011 01100011 01101100 10000011
10011100 01100100 11011011 00111010 01000010

## D.2. I/NAV FEC Coding and Interleaving Numerical Example

Let the input to the convolutional encoder, $M_{input}^{INAV}$, be the following 120 – bit binary string:

11111111 11110000 11001100 10101010 00000000 00001111 00110011 01010101
11100011 11101100 11011111 10001010 00011100 00010011 01000000

Note that the last six bits of the string $M_{input}^{INAV}$ are 6 zeros, corresponding to the tail bits described in Section 4.3.2.2.

The output of the convolutional encoder (described in Table 23 and Figure 13 within Section 4.1.4.1), $M_{encoded}^{INAV}$, is the following 240–symbol binary string:

10001100 00011010 10101010 01110011 00110001 01011010 01101111 01011001
01111000 10010101 01010101 10001100 11001110 10100101 10010000 10100110
10000100 00000010 00000010 00011011 10011001 11101011 01011100 00011000
10111011 11111101 11111101 11100100 01010011 00100010

The encoded symbols of the string $M_{encoded}^{INAV}$ are given as input to the I/NAV block interleaver described in Table 25 within Section 4.1.4.2, characterised by 30 columns and 8 rows. The output of the interleaver, $M_{interleaved}^{INAV}$, is the following 240 – symbol binary string:

10100000 01011111 10001100 11110000 01011110 10100000 00011001 11100011
10101000 01010000 01001111 01010111 01111000 10000110 11111010 11100111
10011000 00011111 11100010 00001001 11110110 00001001 11000111 01100000
10010111 01001000 11000110 11011001 00000111 00111010

# Annex E – Reference Algorithm for Exploitation of FEC2 Reed-Solomon Words

In order to recover the I/NAV clock and ephemeris data from unaltered CED words (I/NAV words 1-4) and/or FEC2 RS CED parity words (I/NAV words 17-20), the following simplified example algorithm may be used by the user receiver:

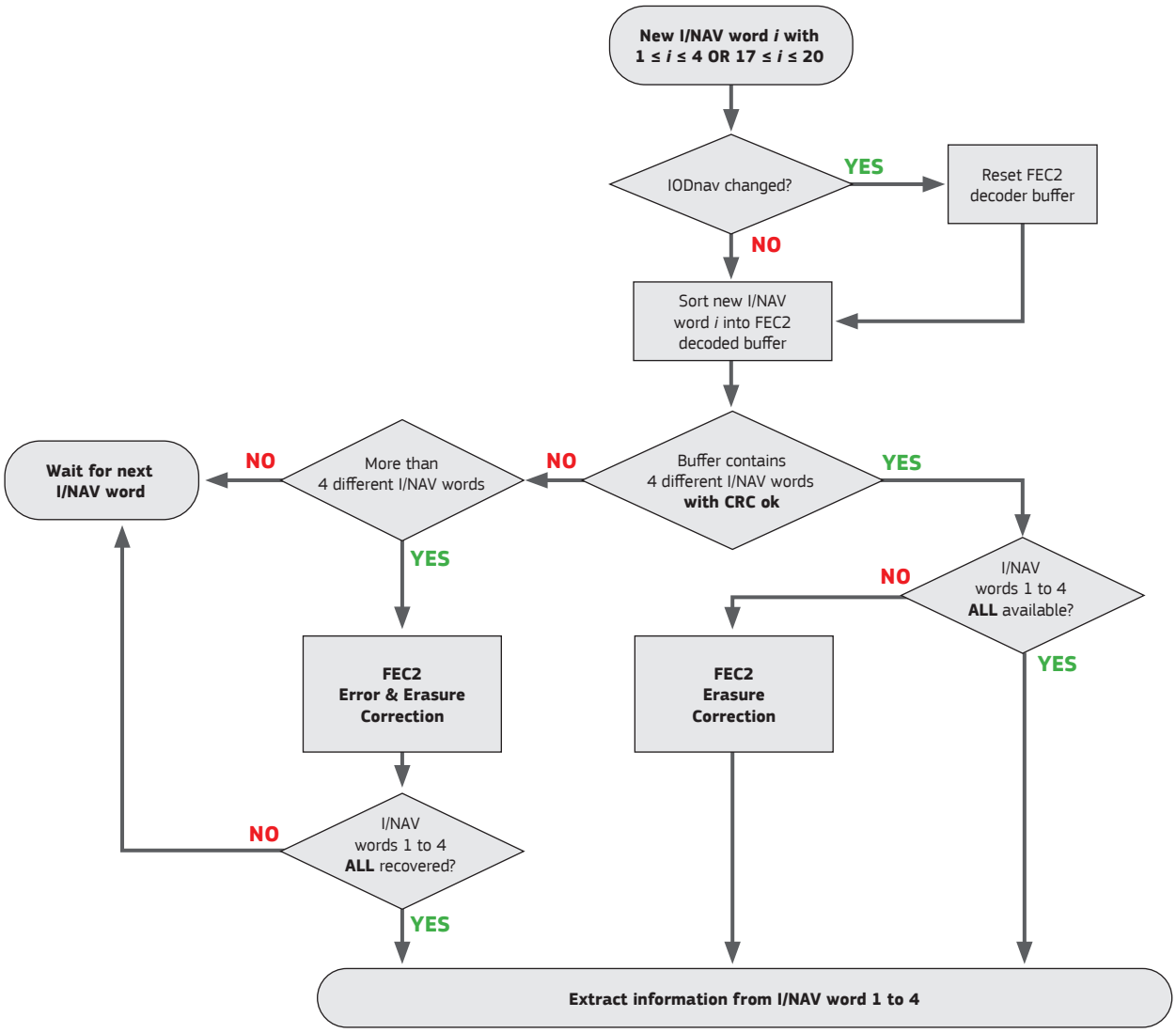


Figure 22. Reference algorithm for exploitation of the FEC2 RS CED words

The octets $C_{0,0}$ and $C_{0,1}$ of the FEC2 RS information vector (see section 5.1.13) contain information that is either pre-defined (i.e. word type value for I/NAV word type 1) or known from repeated transmission in other CED or FEC2 RS CED words (i.e. IODnav value). This known or repeated information can be used to verify correctness of the FEC2 Reed-Solomon erasure and error correction (sanity check).

# Annex F – Specification of the Outer FEC2 Reed-Solomon Encoding of CED in the Galileo E1 I/NAV Message

## F.1. Introduction

This annex provides the definition of the Galois field, the generator polynomial and the generator matrix used for FEC2 Reed-Solomon coding of I/NAV clock and ephemeris data (CED), transmitted in the Galileo I/NAV words 17, 18, 19 and 20.

## F.2. Galois Field

The FEC2 Reed-Solomon is based on a Galois field of order 256, GF(256), defined by the primitive polynomial

$$p(x)=x^8+x^4+x^3+x^2+1.$$

The resulting Galois field elements in polynomial representation, octet representation (binary and integer), and in $\alpha^n$ representation with primitive element $\alpha$ are provided in the following table:

| Polynomial representation | Octet representation | Octet representation (integer) | Power representation $\alpha^n$ |
|---|---|---|---|
| 0 | 00000000 | 0 | $0=\alpha^{-\infty}$ |
| 1 | 00000001 | 1 | $1=\alpha^0$ |
| $\alpha$ | 00000010 | 2 | $\alpha$ |
| $\alpha^2$ | 00000100 | 4 | $\alpha^2$ |
| $\alpha^3$ | 00001000 | 8 | $\alpha^3$ |
| $\alpha^4$ | 00010000 | 16 | $\alpha^4$ |
| $\alpha^5$ | 00100000 | 32 | $\alpha^5$ |
| $\alpha^6$ | 01000000 | 64 | $\alpha^6$ |
| $\alpha^7$ | 10000000 | 128 | $\alpha^7$ |
| $\alpha^4+\alpha^3+\alpha^2+1$ | 00011101 | 29 | $\alpha^8$ |
| $\alpha^5+\alpha^4+\alpha^3+\alpha$ | 00111010 | 58 | $\alpha^9$ |
| $\alpha^6+\alpha^5+\alpha^4+\alpha^2$ | 01110100 | 116 | $\alpha^{10}$ |
| $\alpha^7+\alpha^6+\alpha^5+\alpha^3$ | 11101000 | 232 | $\alpha^{11}$ |
| $\alpha^7+\alpha^6+\alpha^3+\alpha^2+1$ | 11001101 | 205 | $\alpha^{12}$ |
| $\alpha^7+\alpha^2+\alpha+1$ | 10000111 | 135 | $\alpha^{13}$ |
| $\alpha^4+\alpha+1$ | 00010011 | 19 | $\alpha^{14}$ |
| ⋮ | ⋮ | ⋮ | ⋮ |
| $\alpha^4+\alpha^2+\alpha$ | 00010110 | 22 | $\alpha^{239}$ |
| $\alpha^5+\alpha^4+\alpha^2$ | 00101100 | 44 | $\alpha^{240}$ |

| | | | |
|---|---|---|---|
| $\alpha^6+\alpha^4+\alpha^3$ | 01011000 | 88 | $\alpha^{241}$ |
| $\alpha^7+\alpha^5+\alpha^4$ | 10110000 | 176 | $\alpha^{242}$ |
| $\alpha^6+\alpha^5+\alpha^4+\alpha^3+\alpha^2+1$ | 01111101 | 125 | $\alpha^{243}$ |
| $\alpha^7+\alpha^6+\alpha^5+\alpha^4+\alpha^3+\alpha$ | 11111010 | 250 | $\alpha^{244}$ |
| $\alpha^7+\alpha^6+\alpha^5+\alpha^3+1$ | 11101001 | 233 | $\alpha^{245}$ |
| $\alpha^7+\alpha^6+\alpha^3+\alpha^2+\alpha+1$ | 11001111 | 207 | $\alpha^{246}$ |
| $\alpha^7+\alpha+1$ | 10000011 | 131 | $\alpha^{247}$ |
| $\alpha^4+\alpha^3+\alpha+1$ | 00011011 | 27 | $\alpha^{248}$ |
| $\alpha^5+\alpha^4+\alpha^2+\alpha$ | 00110110 | 54 | $\alpha^{249}$ |
| $\alpha^6+\alpha^5+\alpha^3+\alpha^2$ | 01101100 | 108 | $\alpha^{250}$ |
| $\alpha^7+\alpha^6+\alpha^4+\alpha^3$ | 11011000 | 216 | $\alpha^{251}$ |
| $\alpha^7+\alpha^5+\alpha^3+\alpha^2+1$ | 10101101 | 173 | $\alpha^{252}$ |
| $\alpha^6+\alpha^2+\alpha+1$ | 01000111 | 71 | $\alpha^{253}$ |
| $\alpha^7+\alpha^3+\alpha^2+\alpha$ | 10001110 | 142 | $\alpha^{254}$ |

Table 90: Polynomial, octet and power representation of GF(256) using $p(x)=x^8+x^4+x^3+x^2+1$.

## F.3 FEC2 Reed-Solomon Generator Polynomial and Generator Matrix

### F.3.1 The Shortened Reed-Solomon Code

The Reed-Solomon code used as outer code for Clock and Ephemeris Data in the Galileo E1 I/NAV message is a shortened version of an $(n,k,d)$ linear code, where

- the unshortened code vector length is $n = 2^m - 1 = q - 1 = 255$,
- the unshortened information vector length is $k = 195$
- and the minimum Hamming distance is $d = n - k + 1 = 61$.

A code vector is shortened by setting s symbols of the information vector to the zero element of the underlying GF(256). The resulting shortened code is $(n_s,k_s,d)=(n-s,k-s,d)$. The message to be transmitted consists of $k_s$=58 octets $c_0,c_1,...,c_{57}$. Since the number of required parity octets is $n_s-k_s$=60, the shortened code vector has a length of $n_s=k_s$+60=58+60=118 and the shortening parameter is determined as $s=n-n_s$=255-118=137. The shortened code is $(n_s,k_s,d)$=(118,58,61).

### F.3.2 Generator Polynomial

The foreseen Reed-Solomon code is a narrow sense code over GF(256) with primitive element $\alpha$. The corresponding generator polynomial in the indeterminate $x$ is

$$g(x) = \prod_{i=1}^{n_s-k_s} (x - \alpha^i) = \sum_{j=0}^{60} g_j \cdot x^j = \alpha^{45} + \alpha^{92}x + \alpha^{65}x^2 + \cdots + \alpha^{108}x^{59} + x^{60}.$$

The resulting coefficients $g_j$ of the polynomial are tabularised below, using integer octet representation:

| $j$ | $g_j$ | | $j$ | $g_j$ | | $j$ | $g_j$ | | $j$ | $g_j$ |
|---|---|---|---|---|---|---|---|---|---|---|
| 0 | 193 | | 15 | 23 | | 30 | 66 | | 45 | 251 |
| 1 | 91 | | 16 | 36 | | 31 | 46 | | 46 | 124 |
| 2 | 190 | | 17 | 202 | | 32 | 131 | | 47 | 18 |
| 3 | 154 | | 18 | 63 | | 33 | 42 | | 48 | 186 |
| 4 | 101 | | 19 | 20 | | 34 | 187 | | 49 | 244 |
| 5 | 58 | | 20 | 102 | | 35 | 9 | | 50 | 166 |
| 6 | 231 | | 21 | 230 | | 36 | 122 | | 51 | 235 |
| 7 | 197 | | 22 | 131 | | 37 | 3 | | 52 | 167 |
| 8 | 152 | | 23 | 141 | | 38 | 19 | | 53 | 108 |
| 9 | 88 | | 24 | 214 | | 39 | 118 | | 54 | 41 |
| 10 | 73 | | 25 | 45 | | 40 | 6 | | 55 | 19 |
| 11 | 62 | | 26 | 101 | | 41 | 154 | | 56 | 76 |
| 12 | 169 | | 27 | 94 | | 42 | 14 | | 57 | 48 |
| 13 | 88 | | 28 | 62 | | 43 | 193 | | 58 | 42 |
| 14 | 188 | | 29 | 65 | | 44 | 79 | | 59 | 208 |
| | | | | | | | | | 60 | 1 |

Table 91: Integer octet representation of the coefficients of the generator polynomial

### F.3.3 Systematic Encoding Using the Reed-Solomon Generator Polynomial

The zero-padded information vector $\tilde{\mathbf{c}}$

$$\tilde{\mathbf{c}}^{\mathrm{T}} = [\tilde{c}_0, \tilde{c}_1, \tilde{c}_2, \dots, \tilde{c}_{194}] = [c_0, c_1, c_2, \dots, c_{57}, \underbrace{0, \dots, 0}_{137 \text{ zeros}}]$$

can be represented in polynomial form by

$$\tilde{c}(x) = \sum_{j=0}^{194} \tilde{c}_j \cdot x^j = \tilde{c}_0 + \tilde{c}_1 \cdot x + \tilde{c}_2 \cdot x^2 + \cdots + \tilde{c}_{194} \cdot x^{194},$$

where the coefficients $\tilde{c}_{58}$ to $\tilde{c}_{194}$ are set to zero. The coefficients $c_0, c_1, \dots, c_{57}$ form the shortened RS information vector

$$\mathbf{c}^{\mathrm{T}} = [c_0, c_1, c_2, \dots, c_{57}].$$

The unshortened RS code vector $\tilde{\Gamma}$ is obtained from $\tilde{c}(x)$ and $g(x)$ as

$$\begin{aligned}\tilde{\Gamma}(x) &= \tilde{c}(x) \cdot x^{n-k} - R_{g(x)}[\tilde{c}(x) \cdot x^{n-k}] \\ &= \sum_{j=0}^{254} \tilde{\Gamma}_j \cdot x^j = \tilde{\Gamma}_0 + \tilde{\Gamma}_1 \cdot x + \tilde{\Gamma}_2 \cdot x^2 + \cdots + \tilde{\Gamma}_{254} \cdot x^{254} \\ &= \gamma_0 + \gamma_1 x + \cdots + \gamma_{59} x^{59} + c_0 x^{60} + c_1 x^{61} + \cdots + c_{57} x^{117}\end{aligned}$$

where the coefficients $\tilde{\Gamma}_{118}$ to $\tilde{\Gamma}_{254}$ equal zero and are omitted during transmission. The function $R_{g(x)}[f(x)]$ denotes the remainder of the polynomial division $\frac{f(x)}{g(x)}$ and the coefficients $\gamma$ and $c$ denote parity symbols and information symbols, respectively.

The (shortened) RS code vector $\Gamma$ therefore consists of the non-zero information part and the parity part of $\tilde{\Gamma}$ in exchanged order, i.e.: information part first and parity part second:

$$\mathbf{\Gamma}^{\mathrm{T}} = [\Gamma_0, \Gamma_1, \ldots, \Gamma_{117}] = [\tilde{\Gamma}_{60}, \tilde{\Gamma}_{61}, \ldots, \tilde{\Gamma}_{117}, \tilde{\Gamma}_0, \tilde{\Gamma}_1, \ldots, \tilde{\Gamma}_{59}] = [c_0, c_1, c_2, \ldots, c_{57}, \gamma_0, \gamma_1, \ldots, \gamma_{59}].$$

Only the shortened RS code vector is broadcast.

### F.3.4 Systematic Encoding Using the RS Generator Matrix

Since RS codes are linear, the encoding can be equivalently expressed as matrix-vector multiplication in the respective Galois field. The following formulation of the encoding directly yields the shortened RS code vector in the required indexing order.

The unshortened RS code vector $\tilde{\Gamma}$ as per section F.3 consists of 255 octets, the first 60 octets being the parity part $\boldsymbol{\gamma}$. The remaining 195 octets are the unshortened information vector $\tilde{\mathbf{c}}$, whose first 58 octets then form the shortened RS information vector $\boldsymbol{c}$ (figure 23 a). Extracting the nonzero part of $\tilde{\Gamma}$, and swapping its components $\boldsymbol{\gamma}$ and $\boldsymbol{c}$, then yields the desired form of the shortened RS code vector $\mathbf{\Gamma}$ (figure 23 b).

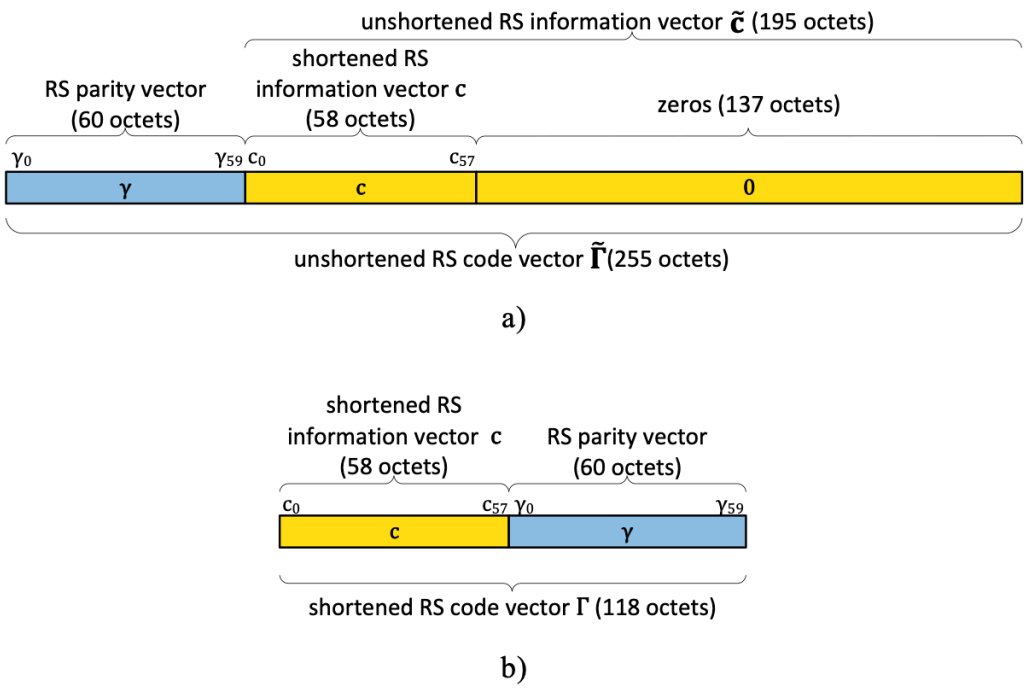


Figure 23. Shortening of the systematic RS code vector (symbol allocation for polynomial encoding)

The shortened code vector $\mathbf{\Gamma}$ as per figure 23 can be computed through a GF(256) matrix multiplication of the shortened RS information vector $\boldsymbol{c}$ with the systematic generator matrix $\mathbf{G}$:

$$\mathbf{\Gamma}=\mathbf{G}\cdot\boldsymbol{c}$$

or more explicitly

$$\mathbf{\Gamma}=\begin{pmatrix}\Gamma_0\\ \Gamma_1\\ \vdots\\ \Gamma_{117}\end{pmatrix}=\begin{pmatrix}c_0\\ c_1\\ \vdots\\ c_{57}\\ \gamma_0\\ \gamma_1\\ \vdots\\ \gamma_{59}\end{pmatrix}=\begin{pmatrix}\boldsymbol{c}\\ \boldsymbol{\gamma}\end{pmatrix}=\mathbf{G}\cdot\boldsymbol{c}=\begin{pmatrix}\mathbf{I}\\ \mathbf{P}\end{pmatrix}\cdot\begin{pmatrix}c_0\\ c_1\\ \vdots\\ c_{57}\end{pmatrix}.$$

The systematic generator matrix $\mathbf{G}$ consists of 118 rows and 58 columns and can be split into two submatrices $\mathbf{I}$ and $\mathbf{P}$, where $\mathbf{I}$ is the identity matrix of size 58x58 and $\mathbf{P}$ is a dense submatrix of size 60x58 which produces the parity part of the code vector, i.e. the RS parity vector $\boldsymbol{\gamma}$:

$$\mathbf{G}=\begin{pmatrix}1 & 0 & 0 & \cdots & 0\\ 0 & 1 & 0 & \cdots & 0\\ 0 & 0 & 1 & \cdots & 0\\ \vdots & \vdots & \vdots & \ddots & \vdots\\ 0 & 0 & 0 & \cdots & 1\\ g_{58,0} & g_{58,1} & g_{58,2} & \cdots & g_{58,57}\\ \vdots & \vdots & \vdots & \vdots & \vdots\\ g_{117,0} & g_{117,1} & g_{117,2} & \cdots & g_{117,57}\end{pmatrix}$$

The PDF version of this ICD provides the generator matrix $\mathbf{G}$ as a file attachment, as comma separated values in octet representation as per table 90.

## *F.4 Further Notes on FEC2 Reed Solomon Implementations*

### F.4.1 Encoding Example

This section provides an example FEC2 Reed Solomon encoding, to support implementers of the above algorithms in the verification of their implementation. The sample information vector (see attached csv file)

$$\boldsymbol{c}^{T}=[147,\quad 109,\quad 66,\quad 23,\ \ldots,\ 162],$$

which contains randomly generated Galois field symbols is encoded via the encoding algorithms described in the previous sections F.3.3 or F.3.4 and yields the shortened RS code vector (see attached csv file)

$$\mathbf{\Gamma}^{T}=[147,\quad 109,\quad 66,\quad 23,\ \ldots,\ 162,\quad 238,\quad 77,\quad 12,\quad 72,\ \ldots,\ 242].$$

The PDF version of this ICD provides the complete encoding example as file attachments, comma separated values in octet representation.

### F.4.2 Implementation Pitfalls

When implementing the RS coding, special care has to be taken concerning the order of the polynomial powers in the respective implementation environment. For example, when using the polynomial representation and an implementation with descending powers, the polynomial coefficients of the information polynomial need to be provided to the encoding

function in the reverse order.

Example: If the coded output sequence reads

$$[147, \quad 109, \quad 66, \quad 23, \ldots, 162, \quad 0, \quad 248, \quad 29, \quad 36, \ldots, 7]$$

instead of the correct coded sequence

$$[147, \quad 109, \quad 66, \quad 23, \ldots, 162, \quad 238, \quad 77, \quad 12, \quad 72, \ldots, 242]$$

this is an indication that the implementation uses descending powers, i.e. the information vector is interpreted as

$$[\boldsymbol{c}_{57},\boldsymbol{c}_{56},\boldsymbol{c}_{55},\ldots,\boldsymbol{c}_{0}]^{T}$$

instead of

$$\boldsymbol{c}^{T}=[\boldsymbol{c}_{0},\boldsymbol{c}_{1},\boldsymbol{c}_{2},\ldots,\boldsymbol{c}_{57}].$$

Therefore, the input sequence needs to be reversed

$$[\boldsymbol{c}_{57},\boldsymbol{c}_{56},\boldsymbol{c}_{55},\boldsymbol{c}_{54},\ldots,\boldsymbol{c}_{0}]=[162, \quad 215, \quad 199, \quad 67, \ldots, 147]$$

Accordingly, the output sequence should then be in the following order

$$[\boldsymbol{c}_{57},\boldsymbol{c}_{56},\boldsymbol{c}_{55},\boldsymbol{c}_{54},\ldots,\boldsymbol{c}_{0},\boldsymbol{\gamma}_{59},\boldsymbol{\gamma}_{58},\boldsymbol{\gamma}_{57},\boldsymbol{\gamma}_{56},\ldots,\boldsymbol{\gamma}_{0}]$$
$$=[162, \quad 215, \quad 199, \quad 67, \ldots, 147, \quad 242, \quad 137, \quad 76, \quad 212, \ldots, 238]$$

Nevertheless, the ordering of the information and parity octets as described and depicted above in figure 23 b) must be restored before further processing and embedding the octets into the (RS) CED words.

# Annex G – Authorisation Concerning the OS SIS ICD IPRs

**By practicing, using or copying the OS SIS ICD IPRs or any portion thereof, YOU ACCEPT ALL TERMS AND CONDITIONS OF THIS AUTHORISATION, including in particular the limitations on use, warranty and liability. If you are acting on behalf of a company or other legal entity, you represent and warrant that you have the legal authority to bind that company or legal entity to these terms and conditions. IF YOU DO NOT HAVE SUCH AUTHORITY OR IF YOU AND/OR THAT COMPANY OF LEGAL ENTITY DO NOT WISH TO BE BOUND TO THESE TERMS DO NOT PRACTICE, USE OR COPY THE OS SIS ICD IPRs OR ANY PORTION THEREOF.**

The European Union (hereinafter "the EU") is the owner of, holds the right over, and/or controls the intellectual and industrial property rights to, the OS SIS ICD IPRs listed in section G.12.

In the interest of facilitating and encouraging the adoption of technologies using the EU GNSS, the EU represented by the European Commission hereby issues the Authorisation (as defined in Section 1 below) concerning the OS SIS ICD IPRs towards any individual, corporation or other natural or legal person worldwide, subject to the terms, conditions and limitations described herein. The Authorisation is non-exclusive and royalty-free.

The Authorisation is issued in the context where other GNSS providers provide open and free access to the information necessary to build equipment using civil GNSS signals.

## G.1. Definitions

The under mentioned terms printed with an initial capital letter shall have herein the following meanings unless the context otherwise requires:

"**Authorisation**" – shall mean the EU's covenant that it shall not assert, seek to assert and/or enforce any of the rights and claims it has in relation to the OS SIS ICD IPRs against the practicing, using or copying thereof, subject to the terms, conditions and limitations described herein.

"**Authorised Person**" – shall mean the natural or legal person that benefits from the Authorisation under the terms, conditions and limitations described herein.

"**Export Controls**" – shall mean any international or national export control law or regulation applicable to activities carried out under the OS SIS ICD IPRs that regulates, embargoes or sanctions the export of products, information and/or technology in any way.

"**Field of Use**" – shall mean research and development on, manufacturing, commercialisation, distribution, sale, supply and maintenance of, the Products.

"**GNSS**" – shall mean Global Navigation Satellite System.

"**OS Signal**" – shall mean the open signal broadcasted by the infrastructure developed under the European GNSS Programme.

"**OS SIS ICD**" – shall mean the Open Service Signal-In-Space Interface Control Document in the version as of the date of issuance of this Authorisation and/or, as the case may be, as modified after that date (available at http://www.gsc-europa.eu/system/files/galileo_documents/Galileo_OS_SIS_ICD.pdf).

"**OS SIS ICD Copyright**" – shall mean the copyright on and to the OS SIS ICD document and/or its content.

"**OS SIS ICD IPRs**" – shall mean the intellectual or industrial property rights listed in section G.12, including Patents and OS SIS ICD Copyright. For the purpose of this Authorisation, OS SIS ICD IPRs also include any and all intellectual or industrial property rights and other proprietary rights on and to the Technical Data of the OS SIS ICD.

"**Patents**" – shall mean any and all patents and/or patent applications mentioned in section G.12, including the inventions described and claimed therein as well as any divisions, continuations, continuations-in-part, re-examinations and reissues thereof, and any patents issued from said patent applications.

"**Products**" – shall mean software, electronic devices (e.g., chipsets and receivers) and Value Added Services that are developed – directly or indirectly – by the Authorised Person and that are making use of the OS Signal.

"**Technical Data of the OS SIS ICD**" – shall mean the data related to: Galileo Signal characteristics, the Galileo Spreading Codes characteristics, Galileo Message Structure, Message Data Contents and E1 and E5 Memory Codes, as such terms are used in the OS SIS ICD.

"**Territory**" – shall mean, with respect to each OS SIS ICD IPRs individually, and subject to Export Controls, the territories covered by said individual OS SIS ICD IPR.

"**Value Added Services**" – shall mean any service developed based on, or by using, the OS SIS ICD IPRs and delivering different or additional capabilities with respect to the OS Signal.

## G.2. Ownership of Rights

Ownership and/or control of the OS SIS ICD IPRs shall remain with the EU and therefore, no title of any intellectual property right on the OS SIS ICD IPRs under the Authorisation shall be acquired by the Authorised Person, whether by implication, estoppel or otherwise.

The Authorisation shall be withdrawn and shall not apply against any individual, corporation or other natural or legal person that challenges the validity of any of the OS SIS ICD IPRs or participates in such a challenge, or encourages or supports any third parties in such a challenge.

## G.3. Scope of the Authorisation

The scope of the Authorisation is limited to the Territory and Field of Use.

The Authorisation is non-transferable and non-licensable. The Authorised Person shall not assign, transfer or license any of the rights granted under the Authorisation.

The Authorised Person shall practice, use and/or copy the OS SIS ICD IPRs in the Field of Use under the Authorisation in a manner so as not to harm the security interests of the EU or its Member States as set forth in article 13 and article 17 of the Regulation (EU) No 1285/2013 of the European Parliament and of the Council of 11th December 2013 on the implementation and exploitation of European satellite navigation systems and repealing Council Regulation (EC) No 876/2002 and Regulation (EC) No 683/2008 of the European Parliament and of the Council.

The commercial exploitation of the Products in the Field of Use under the Authorisation shall be under the sole responsibility of the Authorised Person.

The Authorised Person shall not state or imply in any promotional material or elsewhere that the Products were developed by, are used by or for or have been approved or endorsed by the EU or by the owner of any of the Patents.

Pursuant to the Authorisation, the EU's covenant not to assert covers the following activities of the Authorised Person:

a) the use of the Technical Data of the OS SIS ICD, including their integration and incorporation into any Products, by the Authorised Person or by third parties contractors used by the Authorised Person for manufacturing said Products;

b) the storage of the Technical Data of the OS SIS ICD, provided the source is acknowledged;

c) the reproduction of the OS SIS ICD, in whole or in part, its distribution and its publication for non-commercial not-for-profit purposes and scale without amending the document or adding any element;

d) providing links to the EU website where the document is published, provided the source is acknowledged, in accordance with the copyright notice in the OS SIS ICD.

This list is exhaustive. No other activity shall benefit from the Authorisation. The practice of any of the OS SIS ICD IPRs outside of the scope of the Authorisation shall be deemed in breach of the intellectual property rights of the EU.

Subject to the foregoing, the Authorised Person shall have the discretion to select distributors and otherwise determine the commercial strategy, including all channels of distribution, regarding the distribution and sale of the Products in the Territory.

The Authorised Person shall be solely responsible for (but failure to strictly abide by a) and b) below shall not be in contradiction with the Authorisation):

a) exercising its activities hereunder strictly in compliance with all laws and regulations of each of the countries in which such activity takes place;

b) compliance with all Export Controls.

## G.4. Additional Intellectual Property Rights and Maintenance of Patent Rights

The EU reserves the right, in the course of the Authorisation term, to acquire ownership or control of additional intellectual or industrial property rights related to the OS Signal. In that case, the EU may update section G.12 accordingly. The EU however takes no obligation to communicate the acquisition of or licence to additional intellectual or industrial property rights related to the OS Signal.

The Authorisation shall automatically cover any such additional intellectual or industrial property rights included in the updated section G.12, without the need to amend the Authorisation.

The EU shall have no obligation, duty or commitment whatsoever to:

a) maintain the OS SIS ICD IPRs in force, whether in full or partly, nor shall it be obliged to communicate any decision thereto to the Authorised Person;

b) furnish any assistance, technical information or know-how to the Authorised Person.

## G.5. Duration and Termination

With respect to each of the OS SIS ICD IPRs, the Authorisation shall be valid for the whole duration of said OS SIS ICD IPR insofar as the terms, conditions and limitations of the Authorisation are respected.

The Authorisation shall terminate automatically upon any act of the Authorised Person that violates any of the terms, conditions or limitation of the Authorisation, unless the European Union agrees to the remedial measures proposed by the Authorised Person and the latter are implemented in reasonable time set by the Union.

In the event of a termination of the Authorisation for whatever reason, the Authorised Person shall:

a) immediately discontinue the development or use of the Products or any other activity covered under the scope of the Authorisation as defined in Section 4 above; and

b) except in cases of termination for violation of this Authorisation by the Authorised Person, as a temporary exception to point a. above, have the right, during 6 (six) months after the termination of the Authorisation, to sell all remaining Products in stock or in process of being manufactured at that date, or within that term of 6 (six) months, have terminated, finished and/or fulfilled all agreements which have been entered into prior to the termination.

The Authorisation and its validity shall not be influenced by the fact that one or more of the OS SIS ICD IPRs whose practice, use or copy is authorised hereunder should finally be declared not granted or invalid.

## G.6. Warranties and Liability

The Authorisation is issued under the OS SIS ICD IPRs as they are. The EU makes no representation and no express or implied warranty, and assumes no liabilities as to any matter whatsoever concerning the OS SIS ICD IPRs, including as to:

a) the condition, the patentability and/or validity and enforceability of the OS SIS ICD IPRs;

b) the freedom to practice, use or copy the OS SIS ICD IPRs, to perform the activities that benefit from the Authorisation, or to develop, commercialise or exploit the Products;

c) any third party's prior rights to use the OS SIS ICD IPRs and/or to enjoin the activities that benefit from the Authorisation;

d) the dependency of the OS SIS ICD IPRs on third parties' intellectual or industrial property rights;

e) the merchantability or fitness for a particular purpose of the OS SIS ICD IPRs and/or the Products.

To the full extent allowed by law, all warranties, whether expressed or implied, for any use of OS SIS ICD IPRs or related to the Products, including on product liability, are excluded, and the EU shall not be held liable for any claim or damage related thereto, being asserted by the Authorised Person or any third party with respect to the activities of the Authorised Person under the Authorisation.

## G.7. Infringements by Third Parties

The EU shall have the discretionary right and faculty to decide whether or not to bring an action for any infringements of the OS SIS ICD IPRs in the case where a third party does not benefit from the Authorisation, even where the EU has been duly informed about such

alleged infringement by the Authorised Person. The EU shall have no obligation whatsoever to bring such an action nor to notify any decision thereto to the Authorised Person.

## G.8. Action for Infringement Brought by Third Parties

The Authorised Person shall defend itself and at its own expenses, and bear all the consequences, including the payment of damages and attorney fees, against any claim, suit or proceeding made or brought against the Authorised Person and arising from its activities under the Authorisation, including any claim, suit or proceeding for infringement of third parties' rights as a result of the Authorised Person's practice, use or copy of the OS SIS ICD IPRs or commercialisation of Products. The Authorised Person shall notify the EU without undue delay about any such claim, suit or proceeding. The EU may, at its sole discretion, agree to provide the Authorised Person with any assistance which the EU considers to be appropriate, but the EU shall not in any way be obliged to do so. If the EU decides to defend either the Authorised Person or the OS SIS ICD IPRs, the Authorised Person shall collaborate with the EU and provide the EU with all the assistance necessary to such defence.

## G.9. Permits

The necessary steps for obtaining all permits and licences required for the activities under the Authorisation, under the laws and regulations in force at the place where said activities of the Authorised Person are provided or to be provided, shall be the exclusive responsibility of the Authorised Person.

## G.10. Applicable Law and Dispute Resolution

The Authorisation shall be governed by European Union law, complemented where necessary by the law of Belgium.

Except for the right of the EU and/or the Authorised Person to apply to a court of competent jurisdiction for a temporary restraining order or a preliminary injunction to prevent irreparable harm, any dispute, controversy or claim arising under, out of or relating to the Authorisation and any subsequent amendments thereof, including, without limitation, its validity, binding effect, interpretation, performance, breach or termination shall be submitted to mediation in accordance with the WIPO Mediation Rules. The place of mediation shall be Brussels. The language to be used in the mediation shall be English.

If, and to the extent that, any such dispute, controversy or claim has not been settled pursuant to the mediation within sixty (60) days of the commencement of the mediation, it shall, upon filing of a Request for Arbitration by either the EU or the Authorised Person, be referred to and finally determined by arbitration in accordance with the WIPO Expedited Arbitration Rules. Alternatively, if, before the expiration of said period of sixty (60) days, either the EU or the Authorised Person fails to participate or to continue to participate in the mediation, the dispute, controversy or claim shall, upon the filing of a Request for Arbitration by the participating EU or Authorised Person, be referred to and finally determined by arbitration in accordance with the WIPO Expedited Arbitration Rules. The arbitral tribunal shall consist of three arbitrators. The place of arbitration shall be Brussels. The language used in the arbitration proceedings shall be English.

In any action to enforce the Authorisation, the prevailing entity shall be entitled to recover its reasonable attorney's fees, court costs and related expenses from the other entity.

## G.11. Miscellaneous

The provisions of the Authorisation are severable in the sense that the invalidity or unenforceability of any provision of the Authorisation that is not fundamental to its performance shall not affect the validity and/or enforceability of the remaining provisions hereof. Such invalidity or unenforceability of such non-fundamental provision shall not relieve the Authorised Person of its obligations under the remaining provisions of the Authorisation.

This Authorisation fully and exclusively states the scope of the authorisation concerning the OS SIS ICD IPRs that the EU wishes to issue.

The EU reserves the exclusive right to amend the Authorisation upon due public notice.

The fact that the Authorisation is self-executing and that the EU requires no signature of the Authorisation shall not be considered a waiver and shall have no effect on the binding character of the terms, conditions and limitations of the Authorisation upon the practice, use or copy of the OS SIS ICD IPRs by the Authorised Person.

## G.12. List of IPRs

The IPRs listed in the following table are an integral part of the Authorisation.

| | IPR | Name of IPR | Application Number | Date of filing | Applicant | Owner | Designated Countries |
|---|---|---|---|---|---|---|---|
| 1 | Patent | Multi-band antenna for satellite positioning system | PCT/EP2006/064067 | 10/07/2006 | GSA | EU | Australia<br>Canada<br>Norway<br>USA<br>S.Korea<br>China<br>India<br>Japan<br>Russia |
| 2 | Patent | Method for providing assistance data to a mobile station of a satellite positioning system | PCT/EP2006/068177 | 07/11/2006 | GSA | EU | Australia<br>Canada<br>Europe designated countries: (AT, BE, CH, CZ, DEDK, ES, FI, FR, GB, GR, HU, IE, IT, LU, NL, PL, PT, RO, SE, TR)<br>USA<br>S.Korea<br>China<br>India<br>Japan<br>Russia |
| 3 | Patent | Method and generator for generating a spread-spectrum signal (initially referred to as Use of antiphase CBOC (6.1) modulation to improve ranging accuracy in satellite navigation signals) | 11738006 | 20/04/2007 | GSA | EU | USA |
| 4 | Patent | Method and generator for generating a spread-spectrum signal | 12559874 | 15/09/2009 | GSA | EU | USA |
| 5 | Patent | Chaotic spreading codes and their generation | PCT/EP2007/063080 | 30/11/2007 | GSA | EU | Australia<br>Brazil<br>Canada<br>China<br>Europe designated countries: (AT, BE, BG, CH, CY, CZ, DE, DK, EE, ES, FI, FR, GB, GR, HU, IE, IS, IT, LT, LU, MC, NL, PL, PT, RO, SE, SI, SK, TR)<br>India<br>Japan<br>S.Korea<br>Russia<br>USA |
| 6 | Copyright | OS SIS ICD | NA | NA | NA | EU | Worldwide |

| | IPR | Name of IPR | Application Number | Date of filing | Applicant | Owner | Designated Countries |
|---|---|---|---|---|---|---|---|
| 7 | Patent | Spreading codes for a satellite navigation system (concerning memory codes) | PCT/EP2004/014488 | 17/12/2004 | ESA | EU | Canada<br>Europe designated countries: (AT, BE, BG, CH, CY, CZ, DE, DK, EE, ES, FI, FR, GB, GR, HU, IE, IS, IT, LT, LU, MC, NL, PL, PT, RO, SE, SI, SK, TR)<br>USA<br>Brazil<br>China<br>Japan |
| 8 | Patent | Spreading codes for a satellite navigation system (concerning secondary Codes) | PCT/EP2005/007235 | 01/07/2005 | ESA | EU | Canada<br>Europe designated countries: (BE, CH, CZ, DE, ES, FI, FR, GB, GR, HU, IE, IT, LU, MC, NL, PT, SE, TR)<br>USA<br>Brazil<br>China<br>Japan |
| 9 | Patent | Method and device for generating a constant envelope navigation signal with four independent codes | PCT/FR2003/003695 | 12/12/2003 | CENTRE NAT ETD SPATIALES (CNES) | Control by the EU under licence from CNES | Europe designated countries (AT, BE, BG, CH, CY, CZ, DE, DK, EE, ES, FI, FR, GB, GR, HU, IE, IT, LI, LU, MC, NL, PT, RO, SE, SI, SK, TR)<br>USA |
| 10 | Patent | Spread spectrum signal | PCT/EP2006/050179 | 12/01/2006 | CNES | Control by the EU under licence from CNES | Canada<br>China<br>Europe designated countries (AT, BE, BG, CH, CY, CZ, DE, DK, EE, ES, FI, FR, GB, GR, HU, IE, IS, IT, LI, LT, LU, LV, MC, NL, PL, PT, RO, SE, SI, SK, TR)<br>Japan<br>Russia<br>USA |
| 11 | Patent | GNSS radio signal with an improved navigation message | PCT/EP2013/064477 | 09/07/2013 | CNES | Control by the EU under licence from CNES | China<br>Europe designated countries (AL, AT, BE, BG, CH, CY, CZ, DE, DK, EE, ES, FI, FR, GB, GR, HR, HU, IE, IS, IT, LI, LT, LU, LV, MC, MK, MT, NL, NO, PL, PT, RO, RS, SE, SI, SK, SM, TR)<br>Japan<br>South Korea<br>USA |
| 12 | Patent | GNSS radio signal for improved synchronisation | PCT/EP2013/064573 | 10/07/2013 | CNES | Control by the EU under licence from CNES | China<br>Europe designated countries (AL, AT, BE, BG, CH, CY, CZ, DE, DK, EE, ES, FI, FR, GB, GR, HR, HU, IE, IS, IT, LI, LT, LU, LV, MC, MK, MT, NL, NO, PL, PT, RO, RS, SE, SI, SK, SM, TR)<br>Japan<br>South Korea<br>USA |

| | IPR | Name of IPR | Application Number | Date of filing | Applicant | Owner | Designated Countries |
|---|---|---|---|---|---|---|---|
| 13 | Patent | Modulation signals for a satellite navigation system | PCT/GB2004/003745 | 01/09/2004 | Secretary of State for Defence of the UK | Control by the EU under licence from the Secretary of State for Defence of the UK | Australia<br>Canada<br>China<br>Europe designated countries (BE, DE, DK, ES, FI, FR, GB, IT, NL, SE)<br>India<br>Japan<br>New Zealand<br>Russia<br>USA |
| 14 | Patent | Signals, system, method and apparatus | PCT/GB2007/002293 | 20/06/07 | Secretary of State for Defence of the UK | Control by the EU under licence from the Secretary of State for Defence of the UK | Australia<br>Brazil<br>Canada<br>China<br>Europe designated countries (BE, CZ, DE, DK, ES, FI, FR, GB, HU, IT, NL, PT, SE, SK)<br>Israel<br>India<br>Japan<br>Republic of Korea<br>Malaysia<br>Norway<br>New Zealand<br>Russia<br>Singapore<br>USA |
| 15 | Patent Application | Techniques for Transmitting and Receiving GNSS Navigation Messages | 16174636.7 | 15/06/16 | Airbus Defence and Space GmbH | Control by the EU under licence from Airbus Defence and Space GmbH | EU (Pending) |
| 16 | Patent Application | Techniques for Transmitting and Receiving GNSS Navigation Messages | PCT/EP2017/064120 | 09/06/17 | Airbus Defence and Space GmbH | Control by the EU under licence from Airbus Defence and Space GmbH | USA, China, Japan (Pending) |

# Annex H – Authorisation Concerning use of the Galileo Trade Marks

**By using the Galileo Trade Marks in the Field of Use, YOU ACCEPT ALL TERMS AND CONDITIONS OF THIS AUTHORISATION including in particular the limitations on use, warranty and liability. If you are acting on behalf of a company or other legal entity, you represent and warrant that you have the legal authority to bind that company or legal entity to these terms and conditions.**

The European Union (hereinafter "the EU") is the owner of the Galileo Trade Marks.

In the interest of facilitating and encouraging the market uptake of satellite navigation, as required by the GNSS Regulation, the EU represented by the European Commission hereby issues the Authorisation concerning the use of the Galileo Trade Marks in the Field of Use, towards natural or legal persons worldwide, subject to the terms, conditions and limitations described herein. The Authorisation is non-exclusive and royalty-free.

## H.1. Definitions

The under mentioned terms printed with an initial capital letter shall have the meanings stated below. Any reference to the plural shall include the singular and any reference to the singular shall include the plural.

"**Authorisation**" – shall mean the EU's covenant that it shall not assert, seek to assert and / or enforce any of the rights and claims it has in relation to the Galileo Trade Marks against the use thereof, subject to the terms, conditions and limitations described herein.

"**Authorised Person**" – shall mean the natural or legal person that benefits from the Authorisation under the terms, conditions and limitations described herein.

"**EU Stakeholders**" – shall mean the European Space Agency (ESA), the European GNSS Agency (GSA) and other international organisations with activities in GNSS, any of the EU, ESA or GSA contractors and subcontractors at any tier working in the Galileo programme, operator(s) of the Galileo satellite navigation system, EU Member States and their institutions and bodies, including national space agencies.

"**Field of Use**" – shall mean the use of one or more of the Galileo Trade Marks by the Authorised Person in order to signify that the respective Products make use of the GNSS Services provided by the EU and/or the EU Stakeholders. Reference to the Galileo Trade Marks may be made by any means associated with the marketing of the Products, including but not limited to packaging, instructional and promotional materials.

"**Galileo Trade Marks**" – shall mean any and all trade mark registrations and applications owned by EU and/or the EU Stakeholders, anywhere in the world consisting of or incorporating the word GALILEO, including without limitation the trade mark applications and registrations set out in section H.10.

"**GNSS**" – shall mean Global Navigation Satellite System.

"**GNSS Regulation**" – shall mean Regulation (EU) 1285/2013 of the European Parliament and of the Council of 11 December 2013 on the implementation and exploitation of European Satellite Navigation Systems and repealing Council Regulation (EC) No 876/2002 and Regulation (EC) No 683/2008 of the European Parliament and of the Council.

"**GNSS Services**" – shall mean the following activities contemplated by the GNSS Regulation:

a) open service (OS), which is free of charge to the user and provides positioning and synchronisation information intended mainly for high-volume satellite navigation applications;

b) contribution, by means of Galileo open service signals and/or in cooperation with other satellite navigation systems, to integrity-monitoring services aimed at users of safety-of-life applications in compliance with international standards;

c) commercial service (CS) for the development of applications for professional or commercial use by means of improved performance and data with greater added value than those obtained through the open service;

d) public regulated service (PRS) restricted to government-authorised users, for sensitive applications which require a high level of service continuity, free of charge for the Member States, the Council, the Commission, EEAS and, where appropriate, duly authorised Union agencies; this service uses strong, encrypted signals;

e) contribution to the search and rescue support service (SAR) of the COSPAS-SARSAT system by detecting distress signals transmitted by beacons and relaying messages to them.

"**Products**" shall mean software, electronic devices (e.g., chipsets and receivers) and Value Added Services that are developed and marketed – directly or indirectly – by the Authorised Person.

"**Value Added Services**" shall mean any service delivering different or additional capabilities with respect to signals broadcasted by the infrastructure developed under the European GNSS Programmes.

## H.2. Ownership of Rights

Ownership of the Galileo Trade Marks shall remain with the EU and therefore, no title of any intellectual property right on the Galileo Trade Marks under the Authorisation shall be acquired by the Authorised Person.

The Authorisation shall be withdrawn and shall not apply to any natural or legal person that challenges the validity or enforceability of any of the Galileo Trade Marks or participates in such a challenge, or encourages or supports any third parties in such a challenge.

## H.3. Scope of the Authorisation

The scope of the Authorisation is limited to the Field of Use.

The Authorisation is non-transferable and non-licensable. The Authorised Person shall not assign, transfer or license any of the rights granted under the Authorisation.

The Authorised Person shall use the Galileo Trade Marks in the Field of Use under the Authorisation in a manner so as not to harm the security interests of the EU or its Member States as set forth in article 13 and article 17 of the GNSS Regulation.

The commercial exploitation of the Products in the Field of Use under the Authorisation shall be under the sole responsibility of the Authorised Person.

The Authorised Person shall not state or imply in any promotional material or elsewhere that the Products were developed by, are used by or for or have been approved or endorsed by the EU or the EU Stakeholders.

Pursuant to the Authorisation, the EU's covenant not to assert covers the use of the Galileo Trade Marks in the context of the development and marketing of any Products, including its use on the Products themselves and on their packaging, instructional and promotional materials, by the Authorised Person or by third party contractors used by the Authorised Person for manufacturing said Products, only in the Field of Use;

In addition to the limitations described above, the Authorised Person shall not:

a) Use the Galileo Trade Marks or any confusingly similar sign as, or as part of, the stand-alone brand name or sub-brand name of any of its Products, or as the stand-alone registered or trading name of any corporate entity or business. For the avoidance of doubt, this does not prevent the Authorised Person from affixing one or more Galileo Trade Marks to the packaging of their Products;

b) Apply for or obtain registration of any trade mark which consists of, comprises, or is confusingly similar to the Galileo Trade Marks;

c) Claim any interest or rights to the Galileo Trade Marks, other than the rights explicitly granted by the EU under the Authorisation;

By way of example, acceptable use of the Galileo Trade Marks under the Authorisation and in the Field of Use would include "the new [Product brand name] satnav powered by Galileo" or "the [Product brand name] Galileo receiver". "A Galileo receiver" or "Galileo receivers" shall also be considered acceptable as referential uses. Unacceptable uses would include "a new satna v by Galileo" and “the Galileo receiver”.

The Authorised Person shall be solely responsible for exercising its activities hereunder strictly in compliance with all laws and regulations of each of the countries in which such activity takes place.

## H.4. Additional Intellectual Property Rights and Maintenance of Rights

The EU reserves the right, in the course of the Authorisation term, to acquire ownership or control of additional trade marks related with the sign Galileo. In that case, the EU may update section H.10 accordingly. The EU however takes no obligation to communicate the acquisition of additional trade mark rights to the Authorised Person.

The Authorisation shall automatically cover any such additional trade mark rights included in the updated section H.10, without the need to amend the Authorisation. The EU shall have no obligation, duty or commitment whatsoever to:

a) maintain the Galileo Trade Marks in force nor shall it be obliged to communicate any decision thereto to the Authorised Person;

b) provide any assistance, technical information or know-how to the Authorised Person.

## H.5. Duration and Termination

The Authorisation shall be valid as long as the Galileo Trade Marks remain valid and in force, insofar as the terms, conditions and limitations of the Authorisation are respected.

The Authorisation shall terminate automatically upon any act of the Authorised Person that violates any of the terms, conditions or limitation of the Authorisation.

The Authorisation and its validity shall not be influenced by the fact that one or more of the Galileo Trade Marks whose use is authorised hereunder should finally be declared not granted or invalid.

## H.6. Warranties and Liability

The Authorisation is issued under the Galileo Trade Marks as they are. The EU makes no representation and no express or implied warranty, and assumes no liabilities as to any matter whatsoever concerning the Galileo Trade Marks, including as to the validity and enforceability of the Galileo Trade Marks;

To the full extent allowed by law, all warranties, whether expressed or implied, for any use of the Galileo Trade Marks are excluded. The EU shall not be held liable for any claim or damage related thereto, being asserted by the Authorised Person or any third party with respect to the activities of the Authorised Person under the Authorisation.

## H.7. Action for Infringement Brought by Third Parties

The Authorised Person shall defend itself and at its own expenses, and bear all the consequences, including the payment of damages and attorney fees, against any claim, suit or proceeding made or brought against the Authorised Person and arising from its activities under the Authorisation, including any claim, suit or proceeding for infringement of third parties' rights as a result of the Authorised Person's use of the Galileo Trade Marks or marketing of the Products. The Authorised Person shall notify the EU without undue delay about any such claim, suit or proceeding. The EU may, at its sole discretion, agree to provide the Authorised Person with any assistance which the EU considers to be appropriate, but the EU shall not in any way be obliged to do so. If the EU decides to defend either the Authorised Person or the Galileo Trade Marks, the Authorised Person shall collaborate with the EU and provide the EU with all the assistance necessary to such defence.

## H.8. Applicable Law and Dispute Resolution

The Authorisation shall be governed by European Union law, complemented where necessary by the law of Belgium.

The courts of Brussels have exclusive jurisdiction over any dispute regarding the interpretation, application or validity of the Contract.

## H.9. Miscellaneous

The provisions of the Authorisation are severable in the sense that the invalidity or unenforceability of any provision of the Authorisation that is not fundamental to its performance shall not affect the validity and/or enforceability of the remaining provisions hereof. Such invalidity or unenforceability of such non-fundamental provision shall not relieve the Authorised Person of its obligations under the remaining provisions of the Authorisation.

This Authorisation fully and exclusively states the scope of the authorisation concerning the Galileo Trade Marks.

The EU reserves the exclusive right to amend the Authorisation upon due public notice.

The fact that the Authorisation is self-executing and that the EU requires no signature of the Authorisation shall not be considered a waiver and shall have no effect on the binding character of the terms, conditions and limitations of the Authorisation upon the use of the Galileo Trade Marks by the Authorised Person.

## H.10. Galileo Trade Marks

The trade marks listed in the following tables are an integral part of the Authorisation.

**APPLICATIONS**

| Mark | Territory | Application number |
|---|---|---|
| GALILEO JOINT UNDERTAKING | EU | 3710712 |
| GALILEI | EU | 4546561 |
| GALILEO | EU | 11517984 |

| Mark | Territory | Registration number |
|---|---|---|
| GALILEO | EU | 2742237 |